for life...

Glass Railing | Balustrade | Aluminium Accessories

www.alluminiomatina.it

MADE IN ITALY

ALLUMINIO MATINA

AKOS Dış Ticaret Ltd. Şti. is one of the biggest aluminium systems manufacturer that grows fast with AKOS brand name in the world market with 10 years experience and confidence. AKOS smart aluminium railing systems has been recognized in five continents and dozens of countries and have been accredited by international certifications. The AKOS brand, which is completely focused on the foreign markets, brings the future to the highest level with the innovation and qualified human resources. ISO 9000-2015 certification has been documented.

With it's series, it produces detailed architectural solutions for every different market and culture. AKOS products are an indispensable part of artistic and modern designs with the products developed by the innovation center, it solves all kinds of applications with ease. Our first priorities are environmental awareness and life safety. Systems with this issue have been given full marks from international organizations.

Through it's dealerships in different countries, AKOS has created representations that enable the desired product to be achieved in a timely manner. In the following years, AKOS aims to be in closer contact with it's customers from five continents.

We wish to have a great success with our customers for many years.

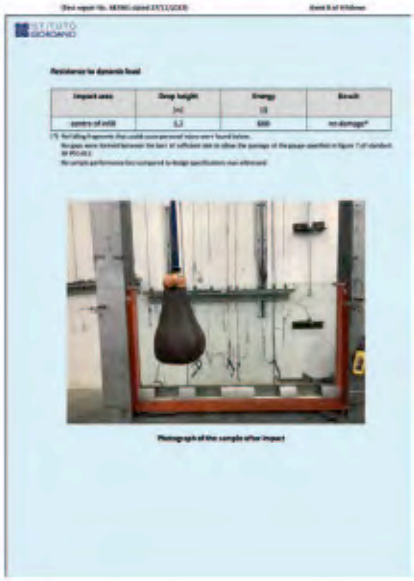

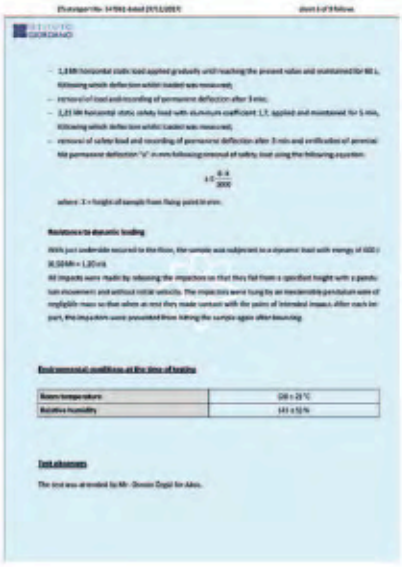

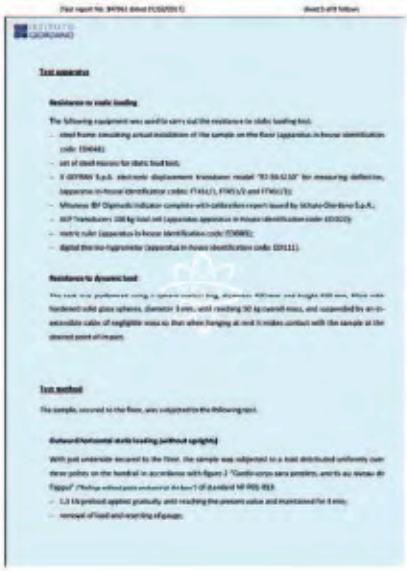

INDEX

ALUSMART 500 Series

Alusmart 500 Series provides maximum security and elegance that appeals to every taste. With these certified models, you can add elegance to your house, office, café and so on!

06/43

Alumax 400 Series

Our main point to design this serie: maximum option and maximum durability! All our customers can use certified Alumax Series with Elliptical, Squareline, Classical Series and with all kind of glass types. Low stock costs - wide model choice!

44/63

Elliptical 300 Series

This unique type railing systems are patented and certified and only Akos can provide this beautiful systems. Elliptical 300 is produced for our customers who follows fashion and who chases today's designs!

68/75

Akos Glass

64/67

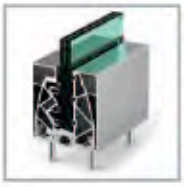

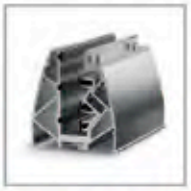

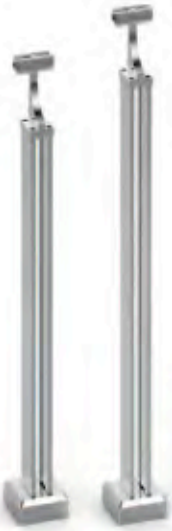

Squarline 200 Series

A wide chart of different models and accessories merges in traditional cornered design! Squarline 200 Series has more than 100 different aluminium accessories and 13 different aluminium profiles for all demands.

76/87

Classical 100 Series

Most common railing type all around the World! Classical 100 is suitable for old and new structures. Akos provides all kind of round accessories and profiles with anodized and painted quality!

88/105

Plexiglass

With these authentic products, you can add an attractive atmosphere to your home, workplace and every aspect. Plexiglass Serie can combined Elliptical, Squarline and Classical Series.

106/111

akos®

The Alusmart Series railing system is ideal for both indoor and outdoor applications. The most frequently used areas are hotels, public spaces, public buildings, offices, houses with modern design and villas.

- Rich range of products
- Multi-product typology and synthesis
- Very simple production possibility despite different solution alternatives
- Quality material with modern design (anodized quality)
- Affordable access to end users
- Resistance to various climatic conditions and long life
- Contrary to expectations, low-cost aluminum
- Alternative materials
- High stock level and efficient sales service network at Akos scale

ALUSMART® 500 Series

A-10 Series
A-11 Series
A-12 Series
A-20 Series
A-30 Series
A-40 Series
A-50 Series
A-60 Series

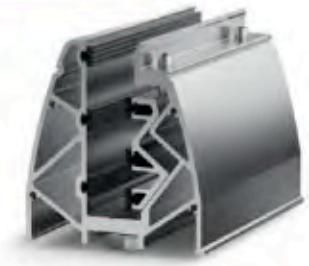

500-101
Glass Base Set-15 Cm

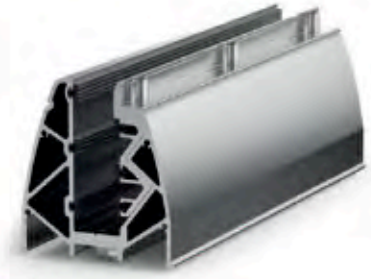

500-102
Glass Base Set-30 Cm

500-103
Endcaps

500-203
Endcaps

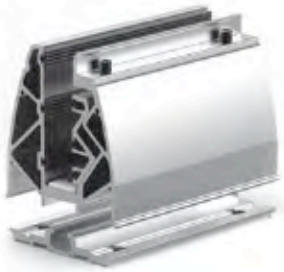

500-104
Glass Base Set-15 Cm

500-105
Glass Base Set-30 Cm

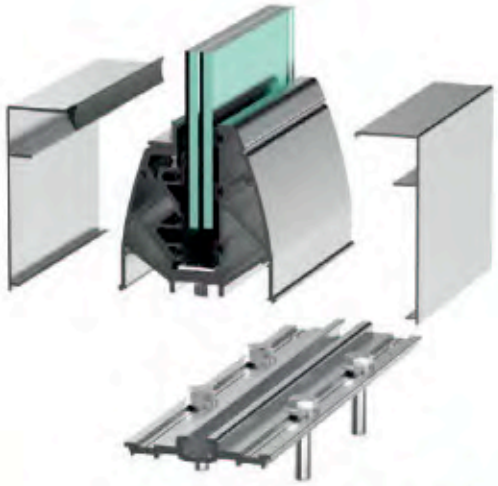

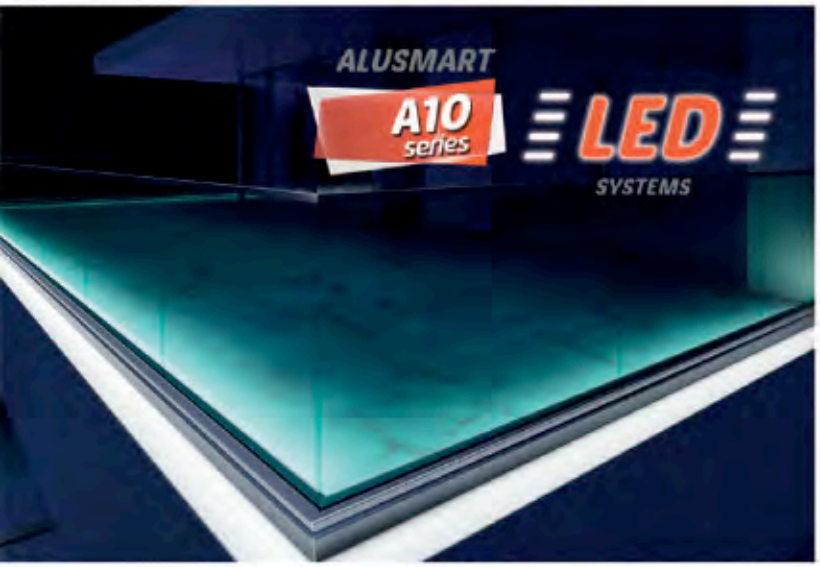

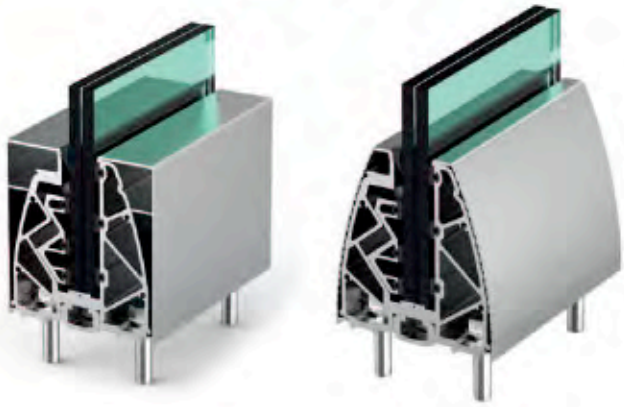

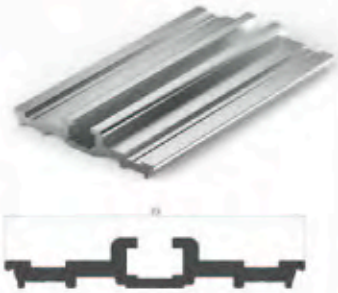

2987
Base Line Profile (6 meters)

2986
Cover Profile (6 meters)

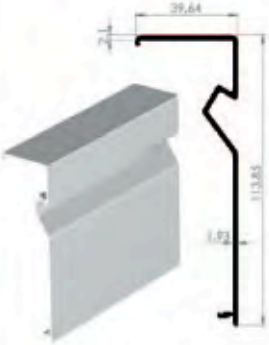

6150
Cover Profile With Led Channel (6 meters)

2985
Cover Profile (6 meters)

500-001
Rubber

- Thanks to the rail profile; a high degree of inertia and a strong connection can be made.
- High structural strength, profile design provides maximum security.
- Because of the glass compression device is made planar and aluminum profile, it does not deform in use for many years and provides high inertia to the system.
- Thanks to the oval and angled cover selections,, it is the best choice for those who want architectural aesthetics.
- In the sequential arrangement of the products, it eliminates the problem of obliqueness.

ISTITUTO GIORDANO

TEST REPORT No. 347061

ALUSMART A10 series

Please use the QR Code to check the installation video!

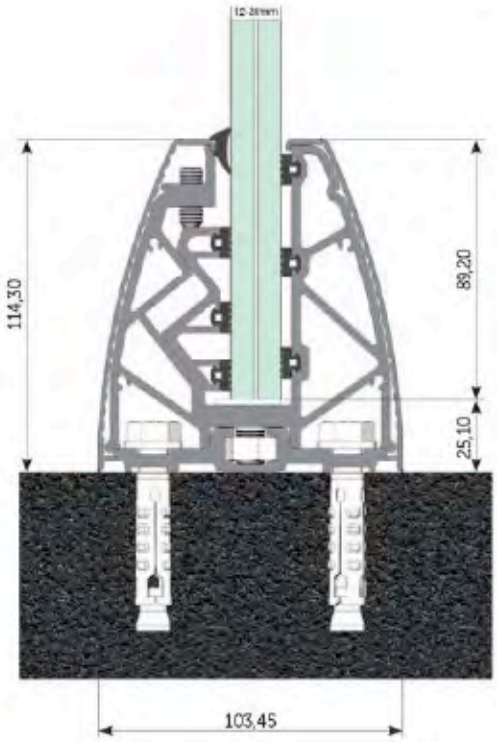

ALUSMART **A-10** Series

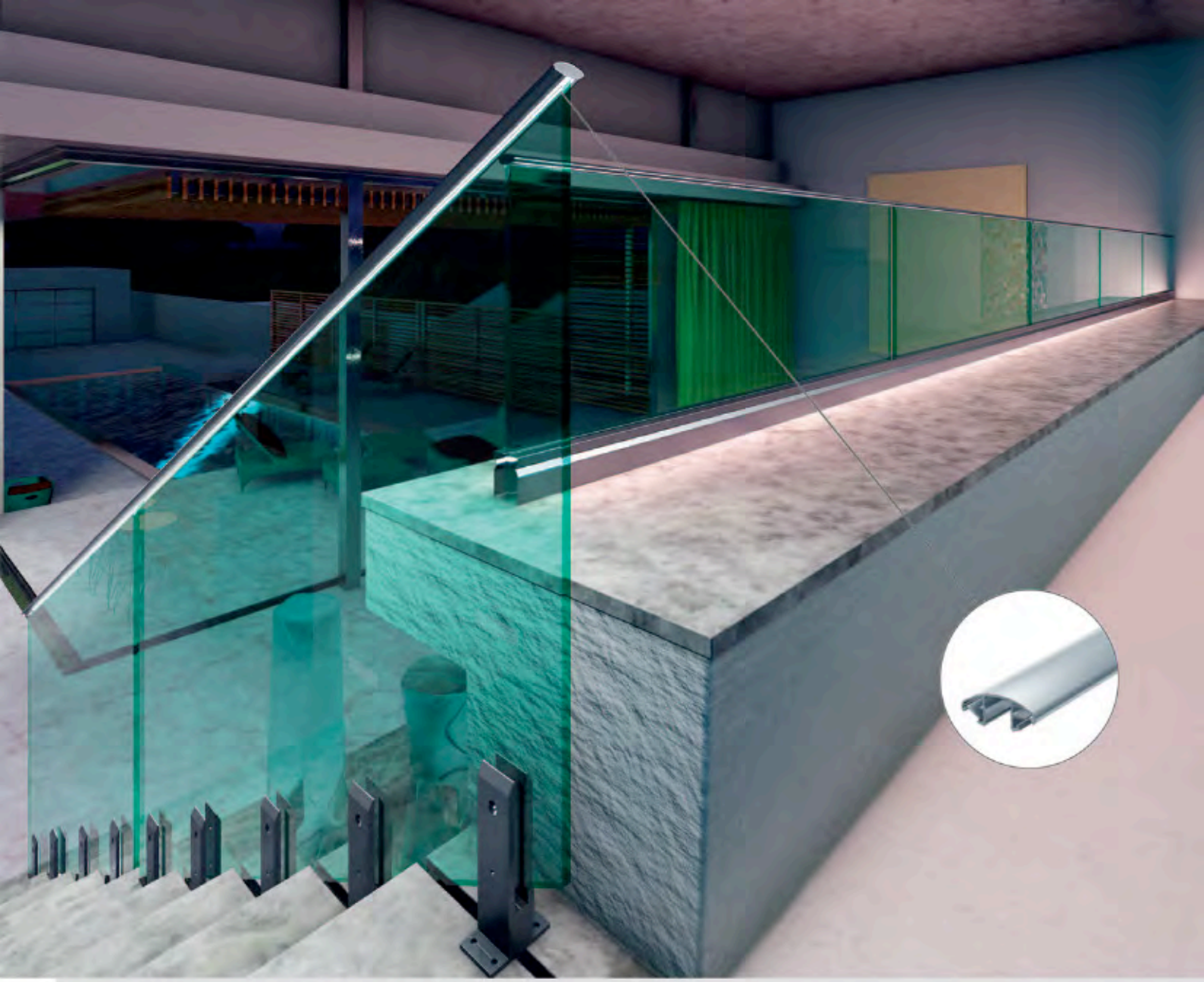

ALUSMART

A10 series

Thanks to the newly designed cover profile with the led channel, you can add a unique view to your home and workplace in the evening.
Also with the 2019 brand new elliptical top handrail profile, you can expose your creativity.
These new products are suitable for private houses, workplaces, hotels, public areas, stadiums and so on.

For Life

LED
SYSTEMS

500-111
Glass Base Set-15 Cm

500-112
Glass Base Set-30 Cm

500-113
Endcaps

6145
Cover Profile (6 meters)

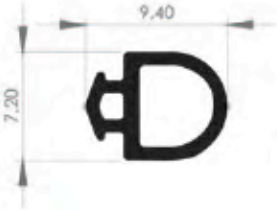

500-116
Rubber

Brand new Alusmart A11 glass holder system allows us to montage the system in all unbalanced and problematic surfaces.

With its unique plastic structure inside, allows us to align the glass approximately 3° on both sides. Each glass base sets has glass alignment apparatus inside. Also, 500-112 has 2 separate glass alignment apparatus and if we put 500-112 on the point where 2 glass meet, we can align both glasses.

A11 is suitable with 8+8mm laminated glass and suitable for private houses, workplaces, hotels, public areas, stadiums and so on.

ALUSMART A11 series

Please use the QR Code to check the installation video!

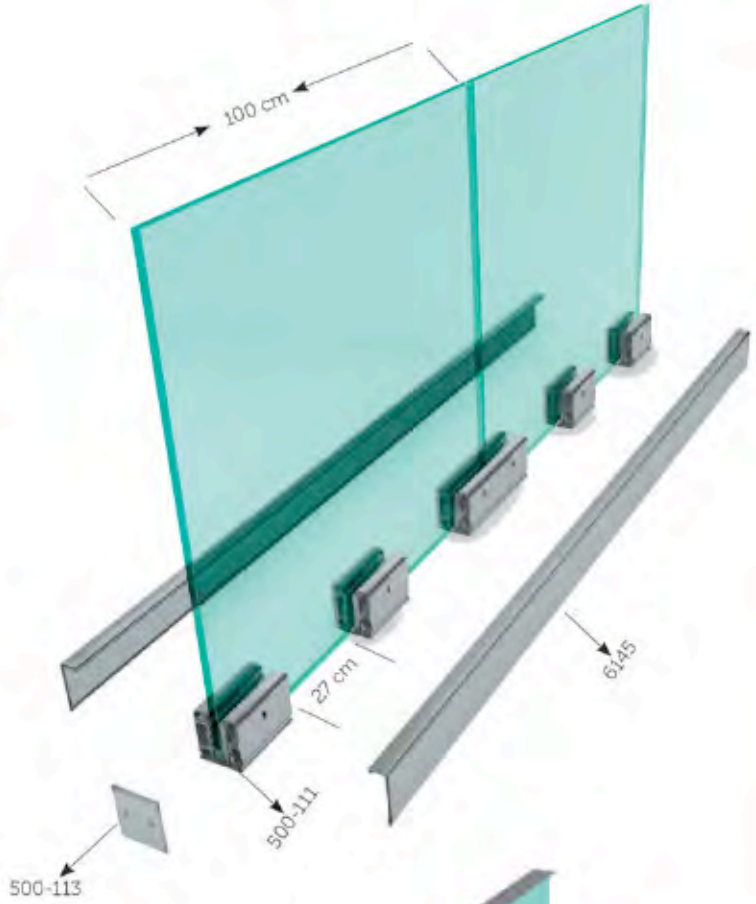

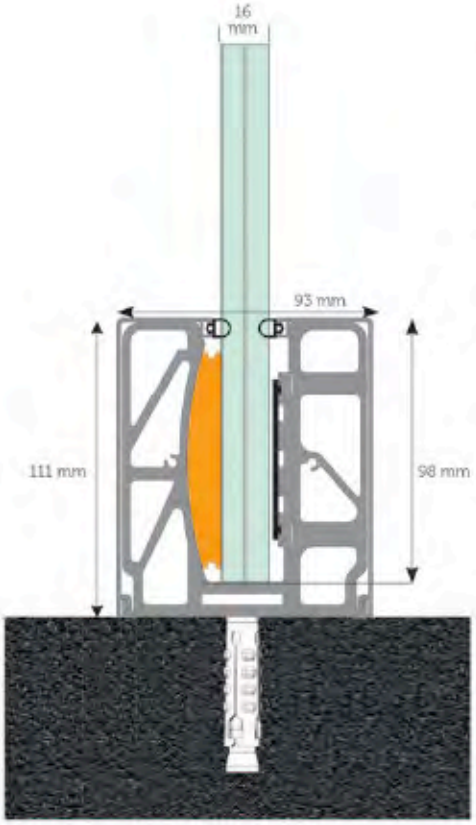

ALUSMART A-11 Series

"A stylish solution for complex situations."

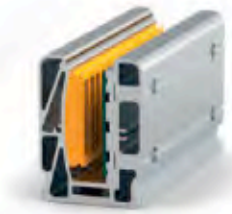

500-121
Glass Base Set-15 Cm

500-122
Glass Base Set-30 Cm

500-124
Plastic Compression Apparatus for 10 mm Glass

500-123
Endcaps

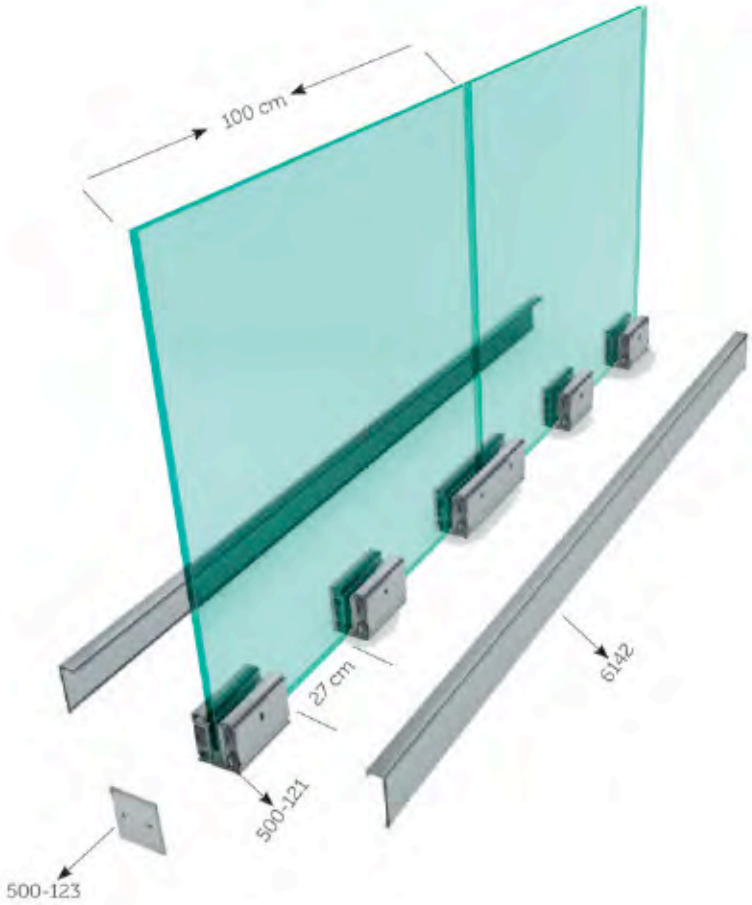

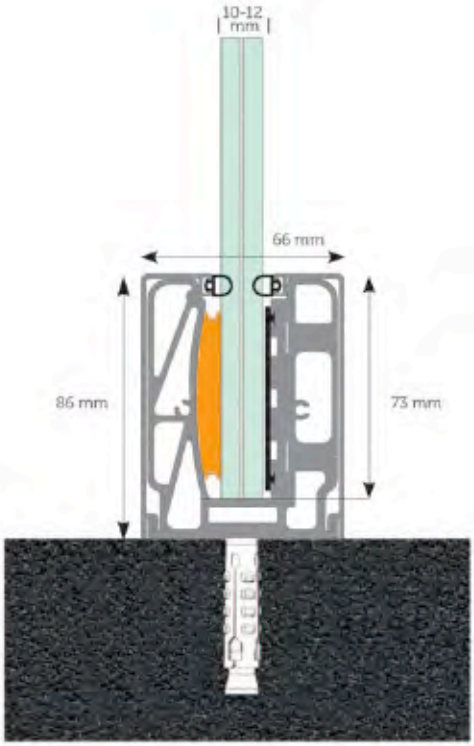

6142
Cover Profile (6 meters)

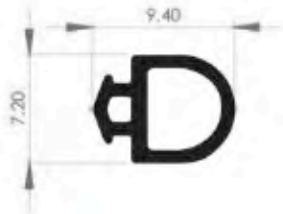

500-116
Rubber

ALUSMART

A12 series

Please use the QR Code to check the installation video!

ALUSMART A-12 Series

Brand new Alusmart A12 glass holder system allows us to montage the system in all unbalanced and problematic surfaces.

With its unique plastic structure inside, this system allows us to align the glass approximately 3° on both sides. Each glass base sets has glass alignment apparatus inside. Also, 500-112 has 2 separate glass alignment apparatus and if we put 500-112 on the point where 2 glass meet, we can align both glasses.

A12 is suitable with 6+6 mm laminated glass and suitable for private houses, workplaces, hotels, public areas, stadiums and so on.

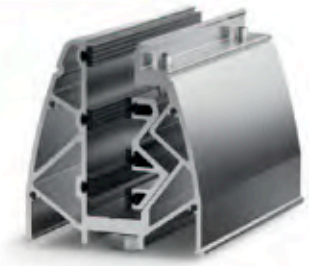

500-101
Glass Base Set-15 Cm

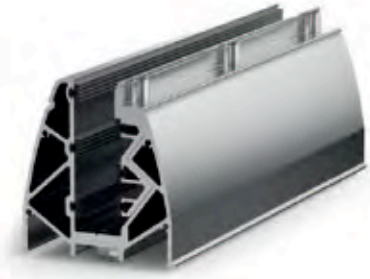

500-102
Glass Base Set-30 Cm

2980
U Profile For Base (6 meters)

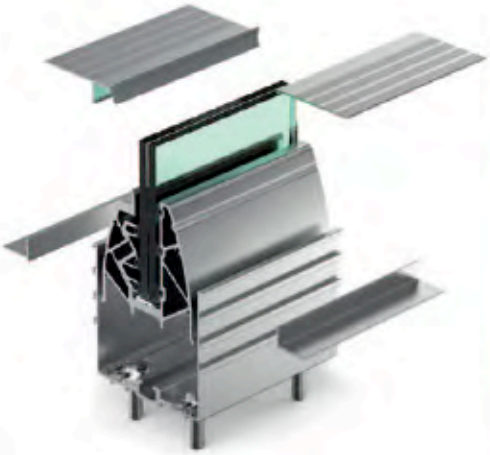

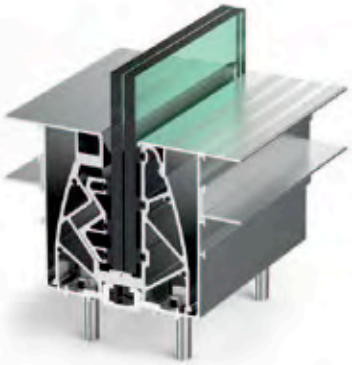

2984
Adjustment Profile (6 meters)

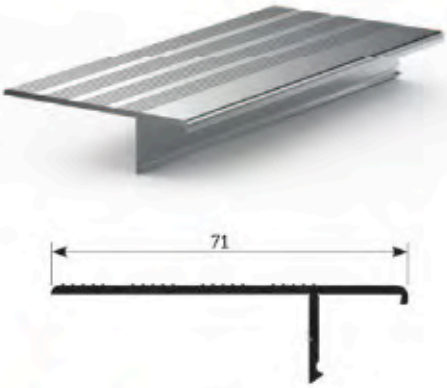

2983
Top Cover Profile (6 meters)

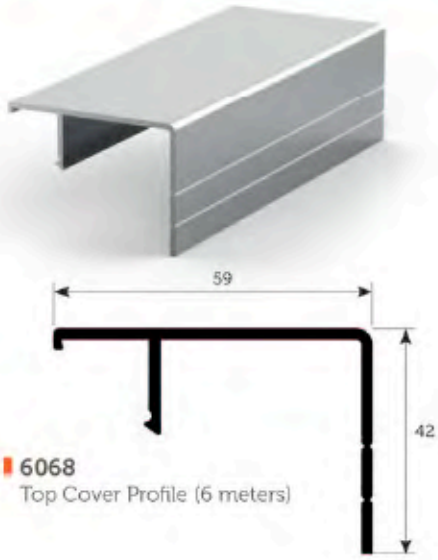

6068
Top Cover Profile (6 meters)

- It is mounted as a recessed type in the ground.
- It's ideal for cafes and shopping malls.
- Thanks to U-shaped rail profile; a high degree of inertia and a strong connection can be made.
- Easy installation saves workmanship and time.
- Because of the glass compression device is made planar and aluminum profile, it does not deform in use for many years and provides high inertia to the system.
- Allows installation of glass up to 20 mm.
- With the design it has, it saves space.
- In the sequential arrangement of the products, it eliminates the problem of obliqueness.

ALUSMART A20 series

Please use the QR Code to check the installation video!

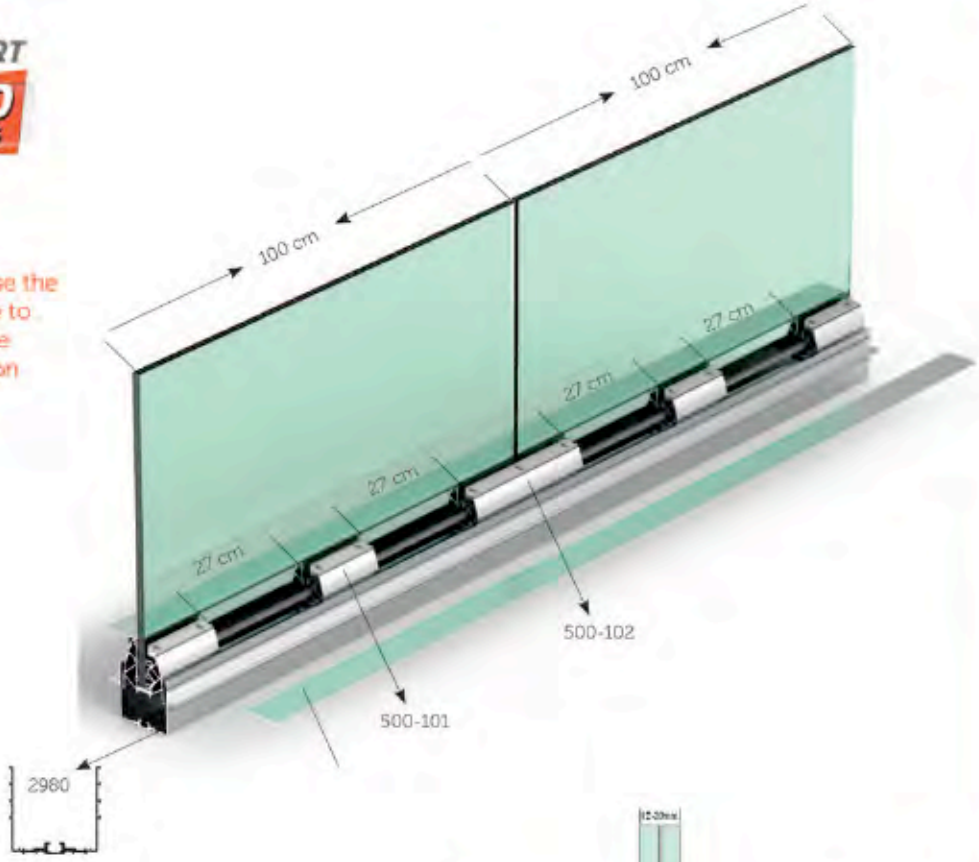

The Alusmart Series railing system is ideal for both indoor and outdoor applications.The most frequently used areas are hotels, public spaces, public buildings, offices, houses with modern design and villas.

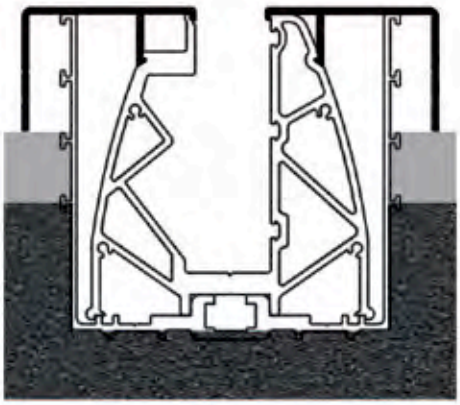

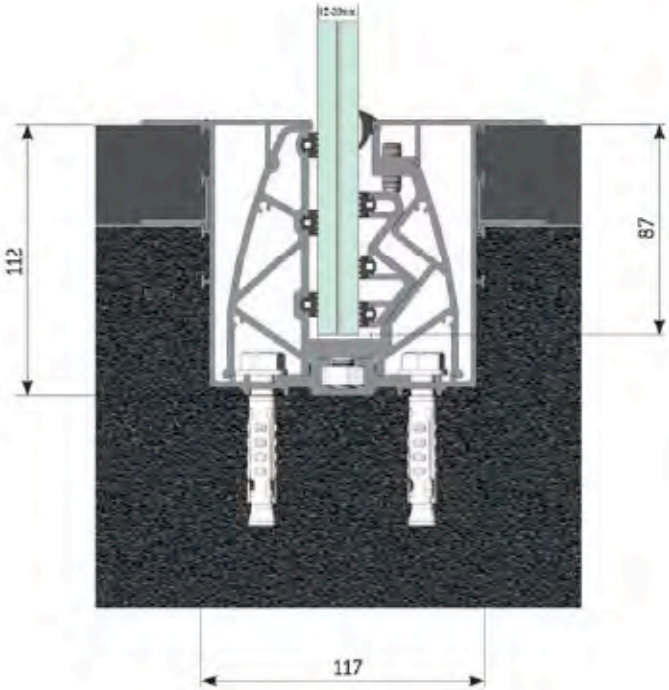

ALUSMART A-20 Series

The perfect solution for
attractive and slim lines!

500-301
Glass Base Set-15 Cm

500-302
Glass Base Set-30 Cm

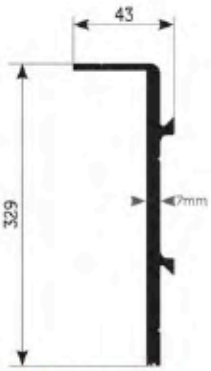

2977
Base Carner Profile (6 meters)

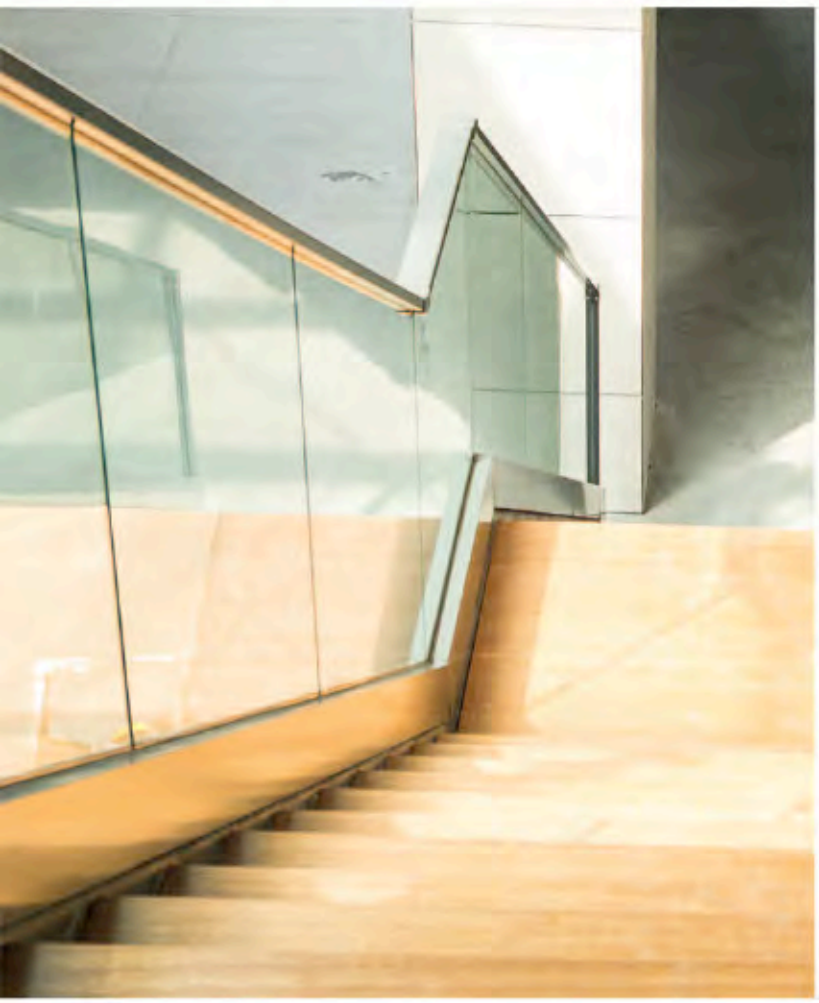

500-001
Rubber

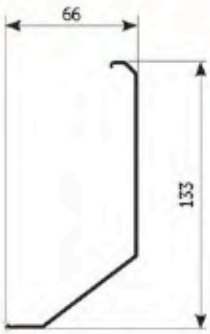

2979
Front Cover Profile (6 meters)

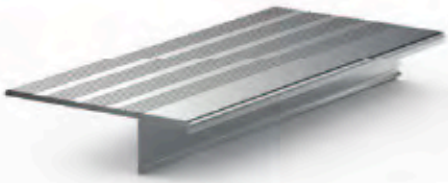

2983
Top Cover Profile (6 meters)

500-303
Endcaps

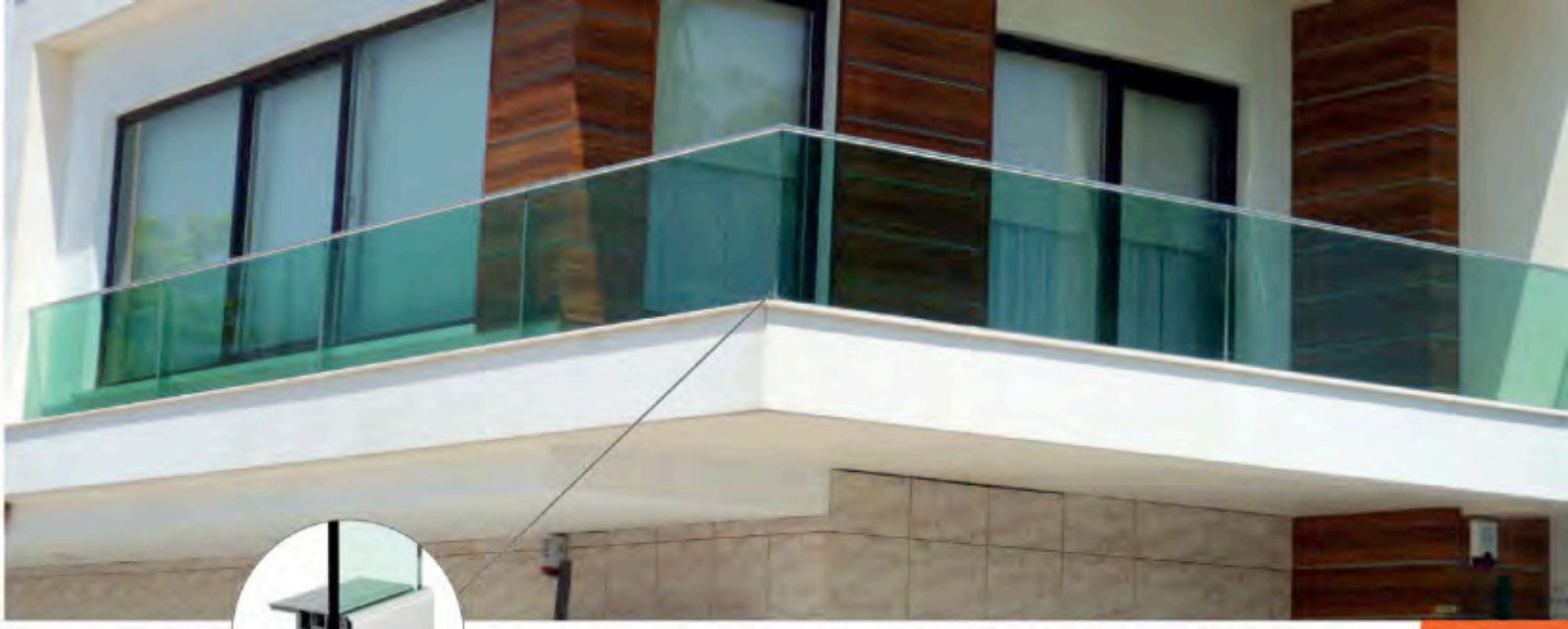

ALUSMART A-30 Series

ALUSMART
A30 series

Please use the QR Code to check the installation video!

ISTITUTO GIORDANO

TEST REPORT No. 347962

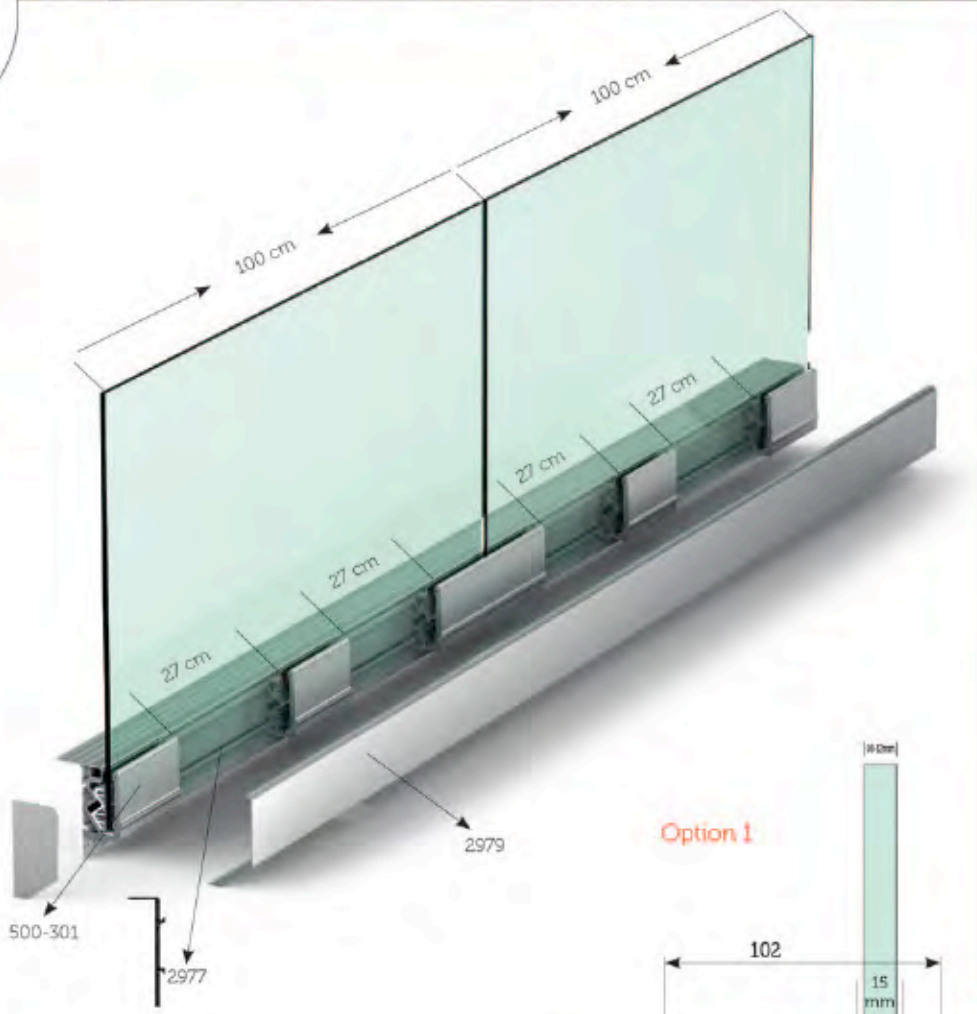

Option 1

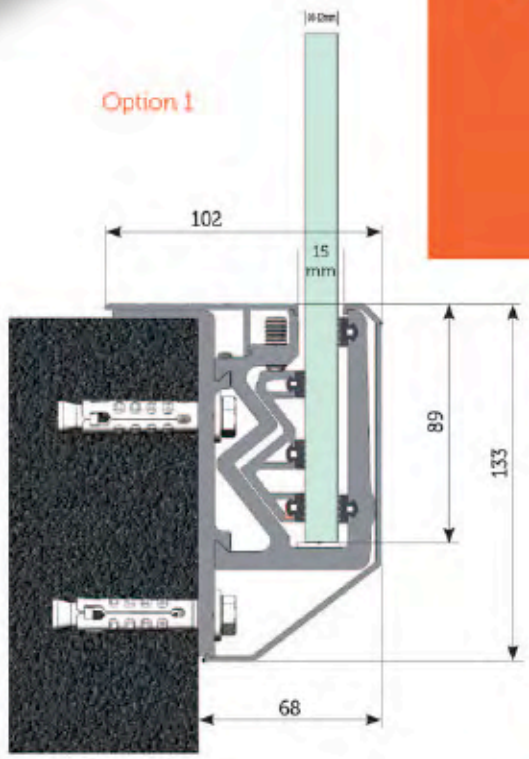

- Unlike the existing systems, the outer cover can be connected without profiling glass mounting, and no extra operation is required.
- High structural strength, profile design provides maximum security.
- Allows installation of glass up to 12 mm.
- Because of the glass compression device is made planar and aluminum profile, it does not deform in use for many years and provides high inertia to the system.
- With the design it has, it saves space.

ALUSMART

A30 series

Please use the QR Code to check the installation video!

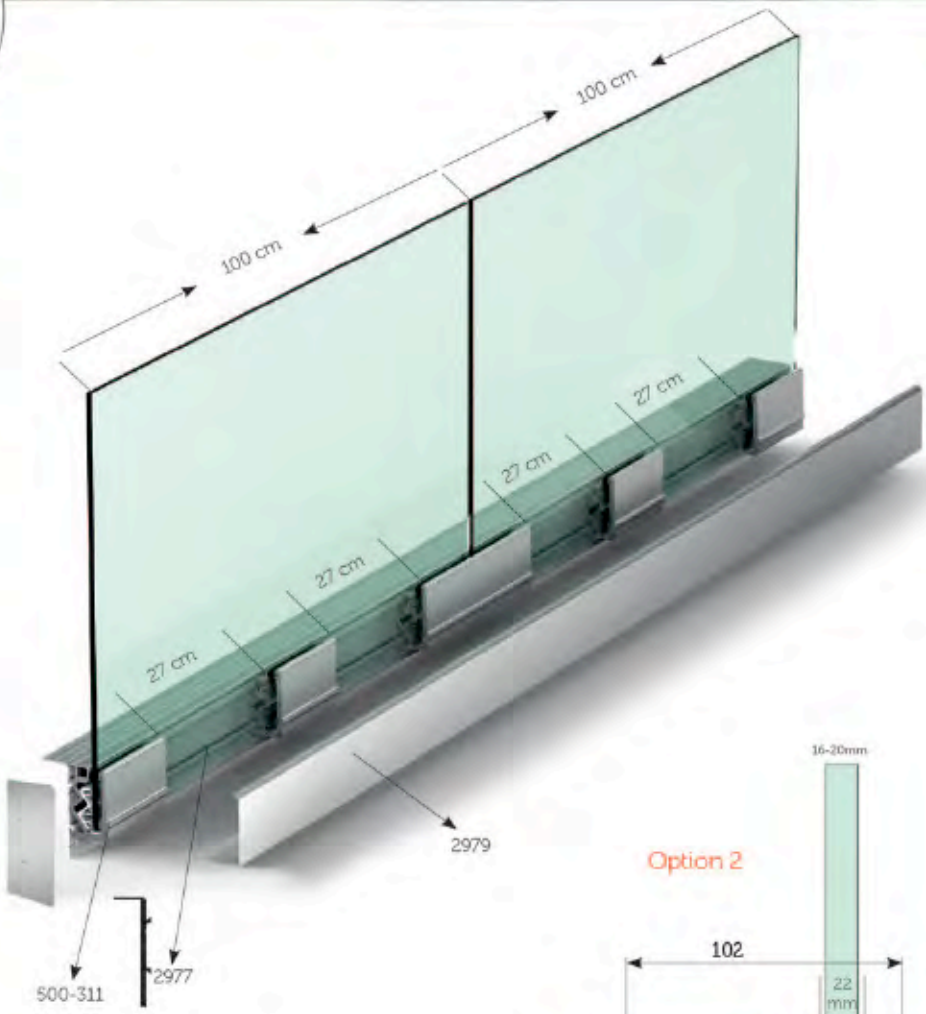

Option 2

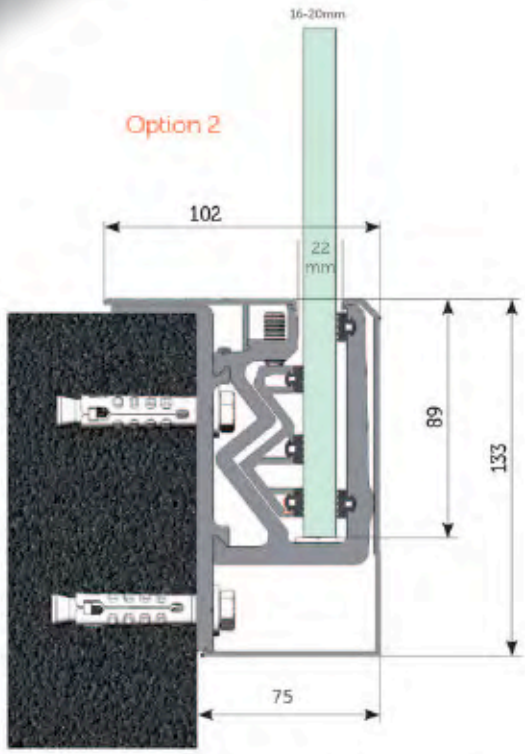

Unlike the existing systems, the outer cover can be installed from inside before mounting the glasses, and no extra operation is required.

High structural strength, profile design provides maximum security. Allows installation of glass up 8+8 mm laminated glass to 10+10 mm laminatesd glass.

Thanks to the glass compression device is aluminium with planar surface , it does not deform in use for many years and provides high inertia to the system. With the design it has, it saves space

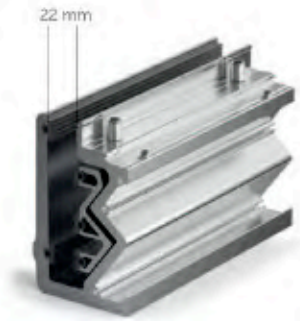

500-311
Glass Base Set-15 Cm

500-312
Glass Base Set-30 Cm

2977
Base Carner Profile (6 meters)

500-001
Rubber

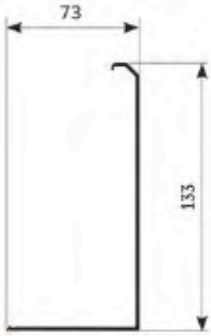

6147
Front Cover Profile (6 meters)

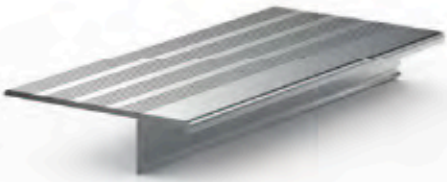

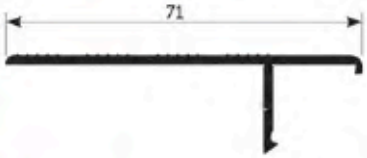

2983
Top Cover Profile (6 meters)

500-313
Endcaps

An ultra-modern line offers a fantastic look!

500-401
Glass Base Set-15 Cm

500-402
Glass Base Set-30 Cm

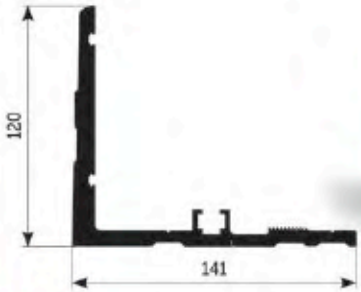

2990
Side Base Profile (6 meters)

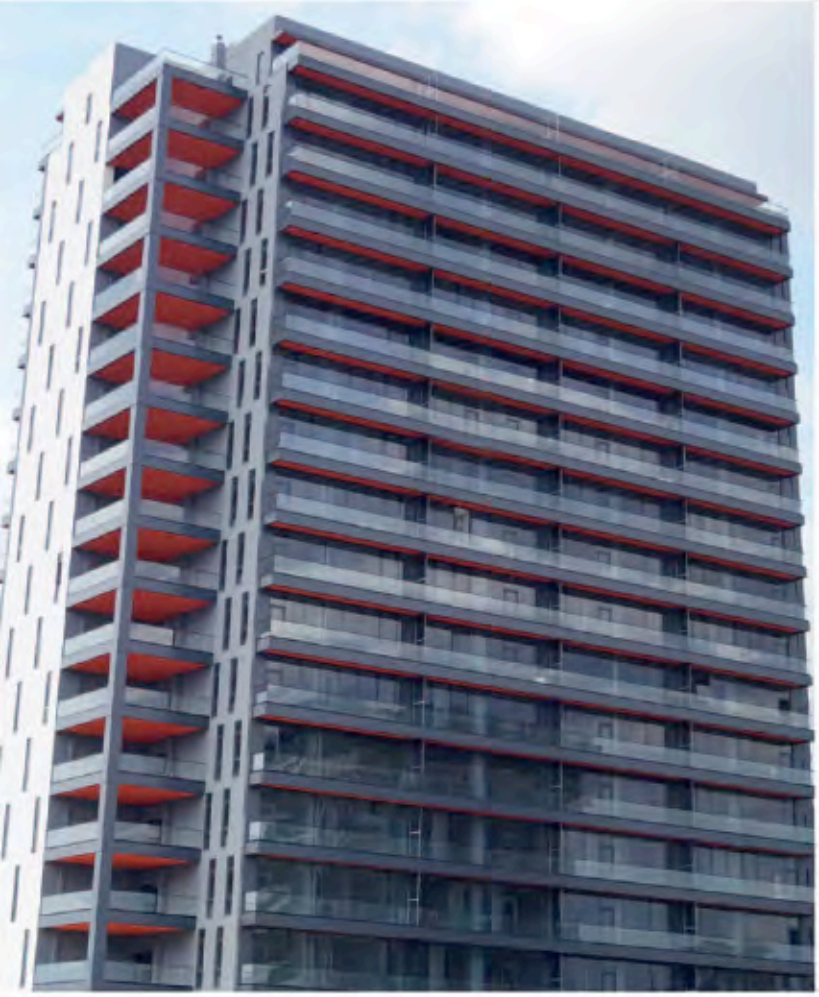

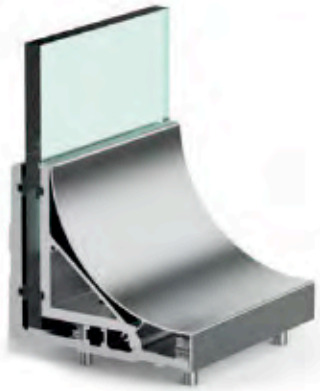

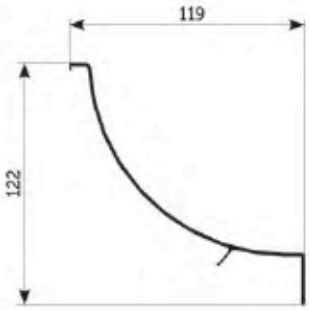

2988
Cover Profile (6 meters)

500-403
Endcaps

500-002
Rubber

- High structural strength, profile designprovides maximum security.
- Thanks to the curved inner cover profile; preventing children from reaching the carrier, allowing adults' center of gravity to stay 60 cm away from the guardrail, preventing possible accidents.
- Easy installation saves workmanship and time.
- Because of the glass compression device is made planar and aluminum profile, it does not deform in use for many years and provides high inertia to the system.
- Allows installation of glass up to 20 mm.
- With the design it has, it saves space.

A40 Qualified to get C3-C4 Classification!

Areas where people may congregate and are susceptible to overcrowding.
According to international norms A40 Serie can be used on: theatres, stadiums, cinemas, discotheques, auditoriums, assemble areas and bars and the like

ALUSMART A40 series

Please use the QR Code to check the installation video!

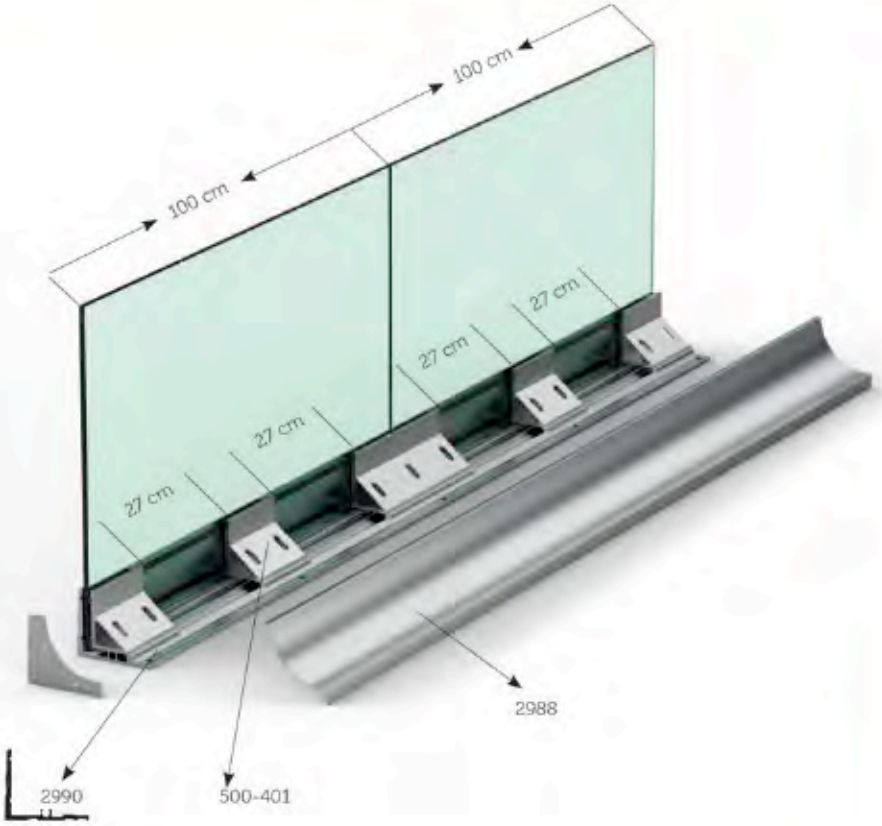

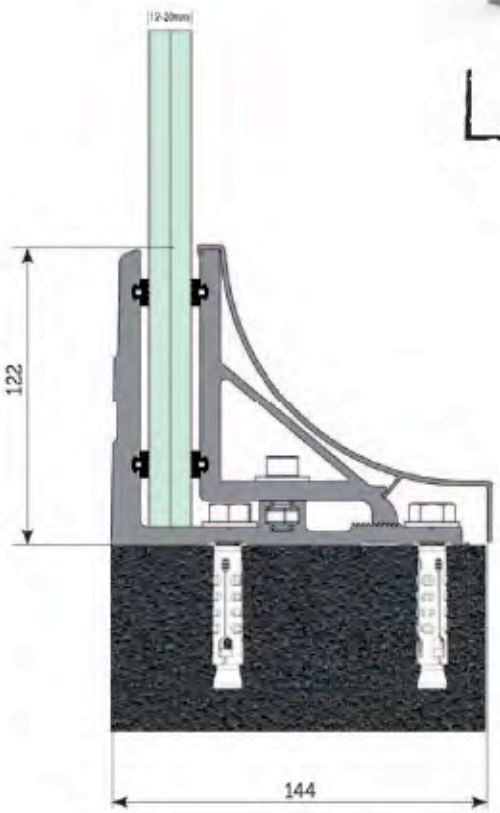

ALUSMART **A-40** Series

500-501
Glass Base Set-15 Cm

500-502
Glass Base Set-30 Cm

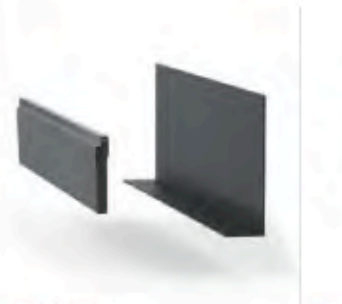

500-012
Plastic Compression Set

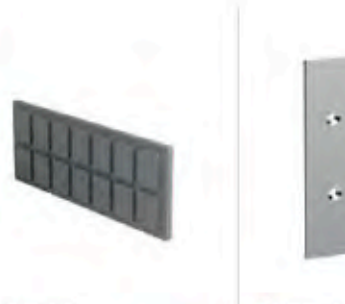

500-028
Plastic Compression Apparatus For 6+6 mm Glass

500-503
Endcaps

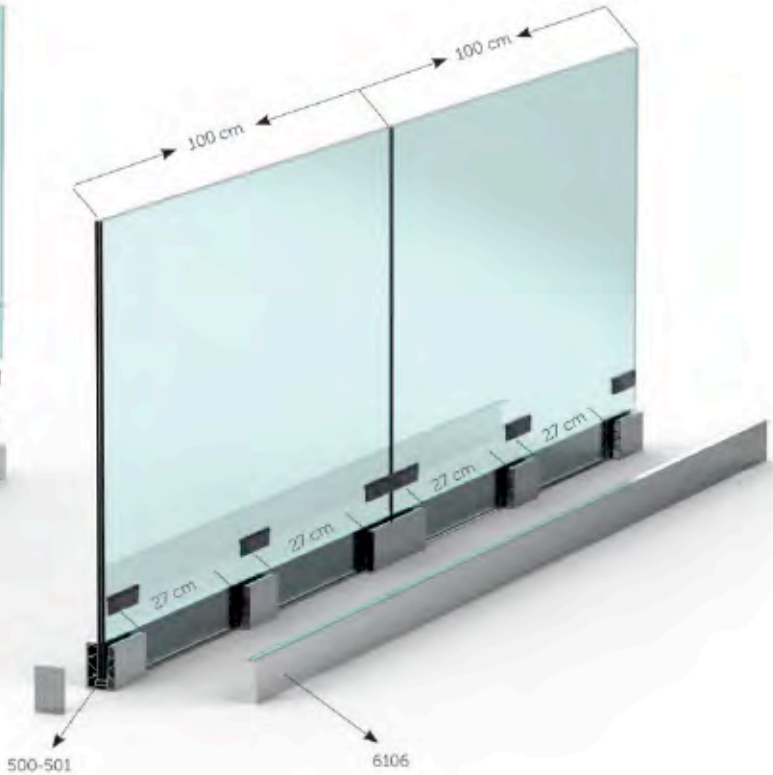

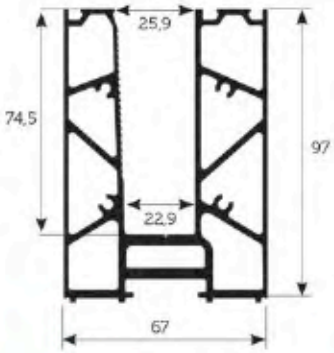

6105
Glass Base Profile (6 meters)

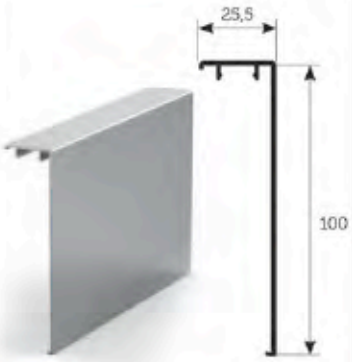

6106
Cover Profile (6 meters)

6107
Top Cover Profile (6 meters)

6148
Top Cover Profile (6 meters)

We create this design for, who is looking high quality with reasonable prices. A50 model glass holder system was created by our talented engineers with sharp intelligence. This system's glass holder profile is suitable for in pieces usage and in full set usages at the same time!
On bottom, there is a small profile to be used as rail profile with the aim of keeping the system aligned. You can use the profile as 15 – 30 cm pieces per 27 cm according to your glass measurements. If you wish you can also use the profile as 6-meters profile blocks. In both ways, we have the most competitive prices all around the World!
Thanks to the plastic entering the serrated chamber in the profile, maximum resistance and durability are created for the glass. Two anodized quality square-shaped cover profiles, creating a stylish appearance.

Option 1

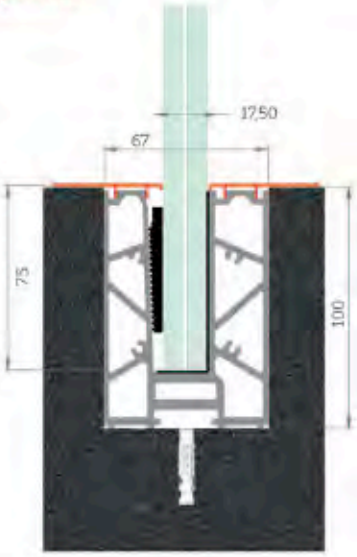

In this application, we have to combine:

6105 as 6-meter whole profile then we need 6148 as 6-meter whole profile. 6148 will be polished and anodized. (2 pieces 6148 for 1 piece 6105) Inside of the system, there will be 500-012 according to your glass dimensions due to tighten and secure the glass.

Option 2

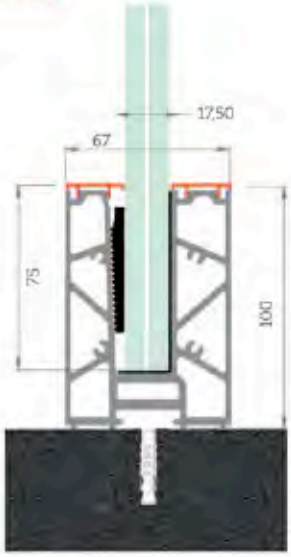

In this application, we have to combine:

6105 as 6-meter whole profile and 6107 as 6-meter whole profile. Both 6105 and 6107 will be polished and anodized. (2 pieces 6107 for 1 piece 6105) For Inside of the system, there will be 500-012 according to your glass dimensions due to tighten and secure the glass. If your Project is not Wall to Wall, also 500-503 will include as an endcap.

Option 3

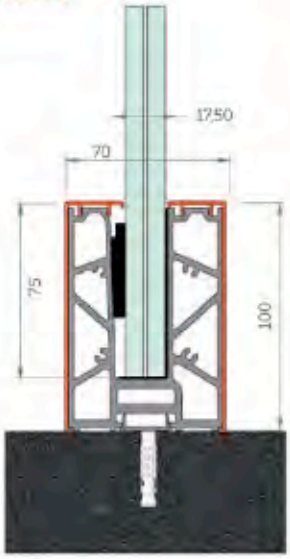

In this application, we have to combine:

2911 as 6-meter whole profile due to aligning the system. 500-101 and 500-102 according to your glass and Project dimensions. (500-101 and 500-102 has plastic compression sets inside) On the last step, 6106 as 6-meter whole profile due to cover profile. This product will be polished and anodized. Also, If your Project is not Wall to Wall, you will need 500-503 as an endcap.

2911
Align Profile (6 meters)

500-001
Rubber

Full transparency is now even more possible!

500-601
Round Glass Holder

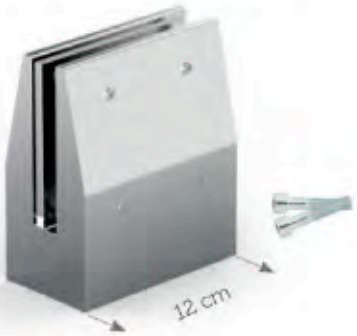

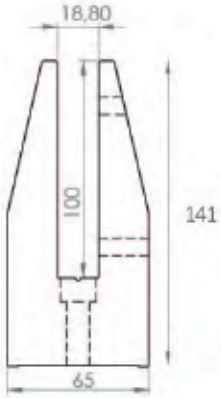

500-604
Block Type Glass Holder (12cm)

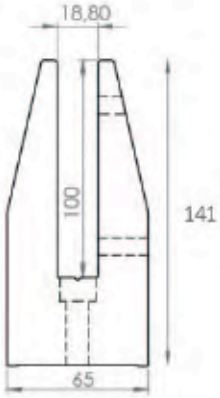

500-603
Elliptical Glass Holder

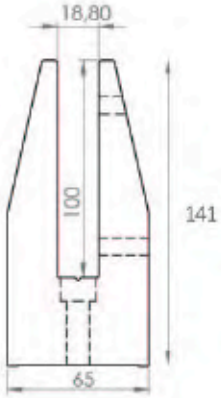

500-606
Block Type Glass Holder (7,5 cm)

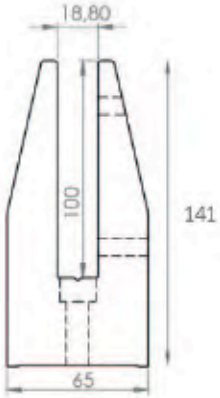

500-607
Block Type Glass Holder (5 cm)

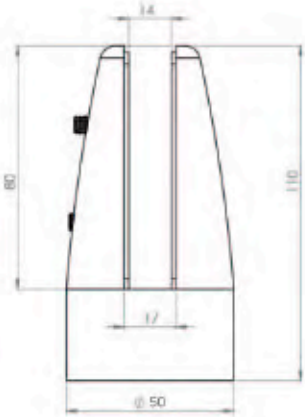

500-605
Small Glass Holder

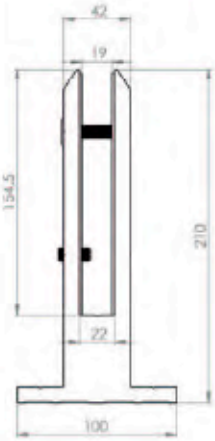

500-602
Square Glass Holder

500-608
Square Glass Holder Cover
(For 500-602)

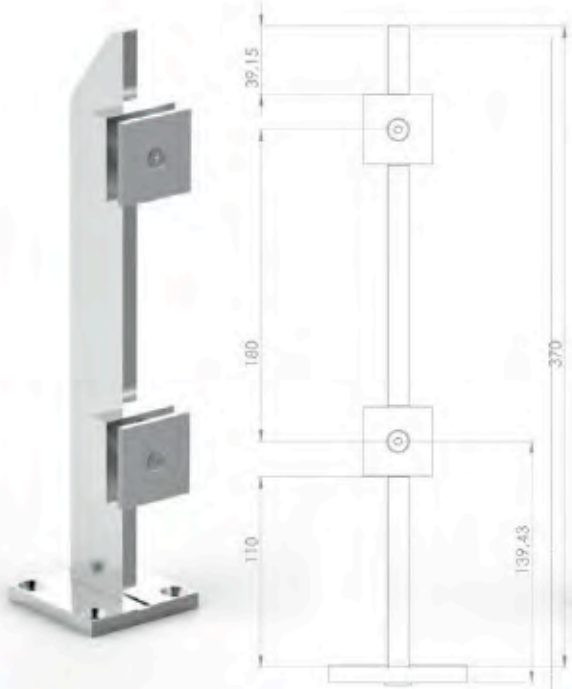

ALUSMART A60 series

Please use the QR Code to check the installation video!

500-610
Double Glass Connector With Lama Pilar - Square

500-611
Double Glass Connector With Lama Pillar - Round

450-302
Cover For Single Lama

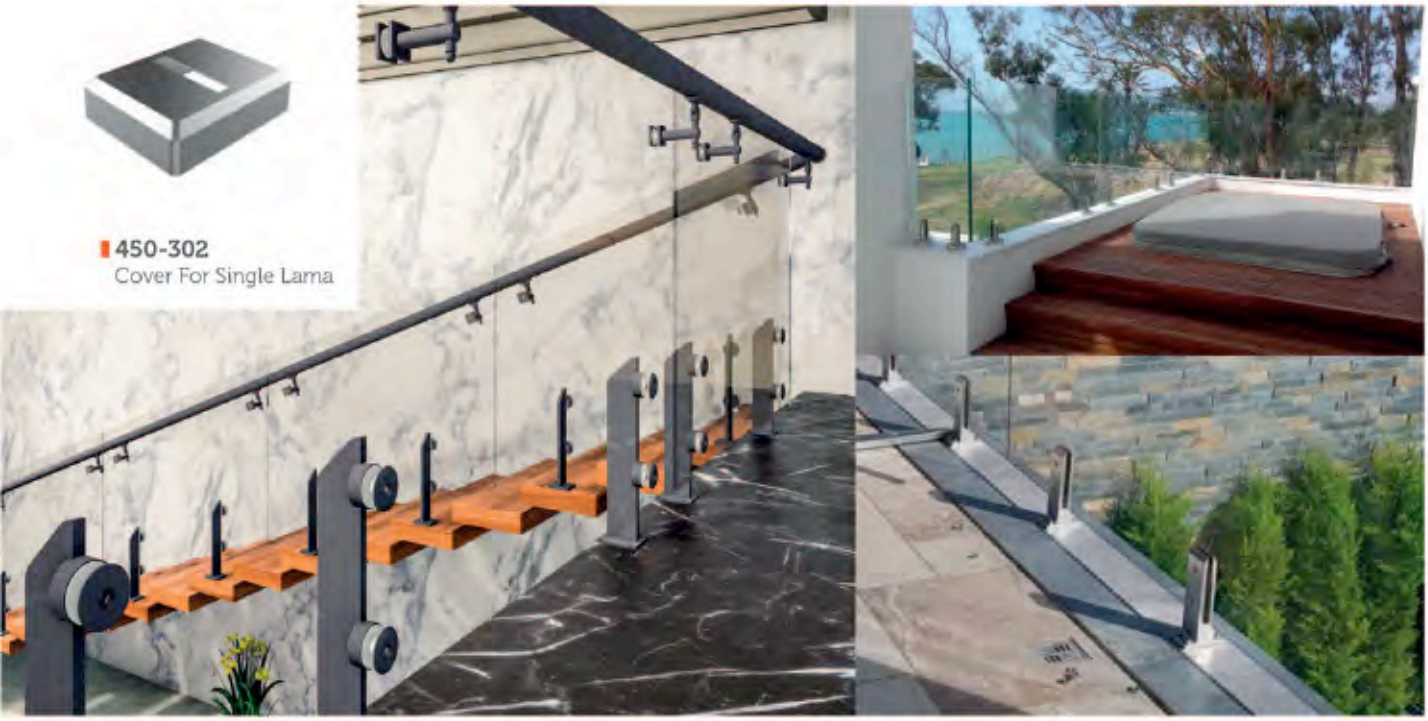

ALUSMART **A-60** Series

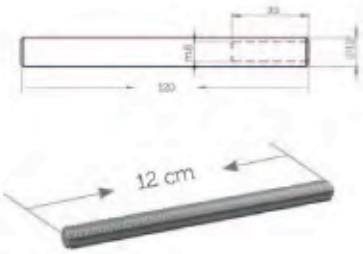

500-027
12 cm 8 metric bolt

500-013 **500-014**
8 Metric Anchor

500-015 **500-016**
8 Metric Anchor

500-017
15 cm Screw + Dowel

For Life

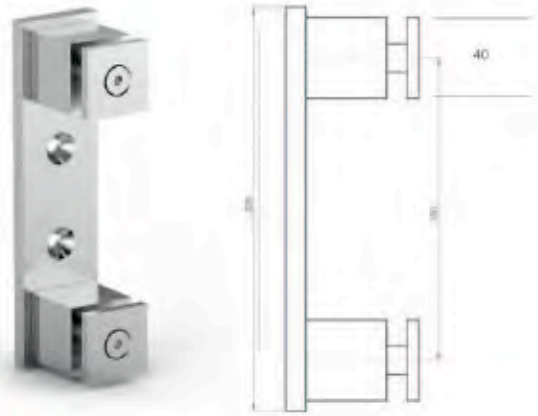

500-612
Double Glass Connection
Socket - Square

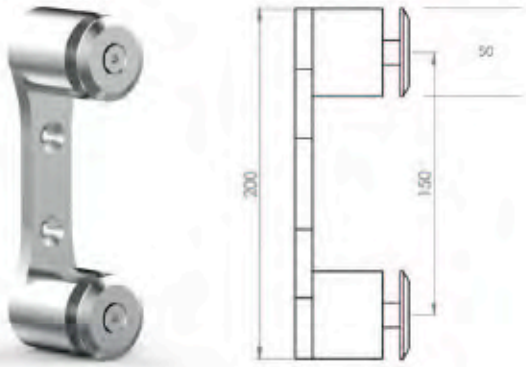

500-613
Double Glass Connection
Socket - Round

500-620
40 X 40 Glass To Wall
Connector

100-912
Glass Side Connector (Ø50)

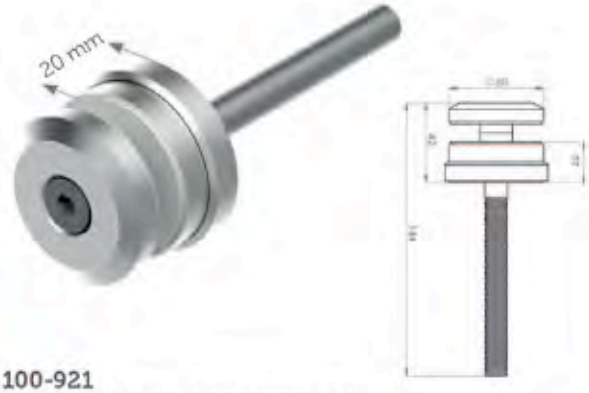

100-921
Small Glass To Wall Connector (Q50)

100-922
Glass To Wall Connector Cover (Ø50)

500-018
Inox Bolt M8x25

500-019
Bolt M8

Please use the QR Code to check the installation video!

ALUSMART A60 series

ALUSMART **A-60** Series

100-919
Square Glass "L" Side Connector-(Ø50)

100-920
Square Glass "L" Side Connector-(Ø50)

100-918
Square Glass Side Connector-(Ø50)

100-914
Square Glass "L" Side Connector

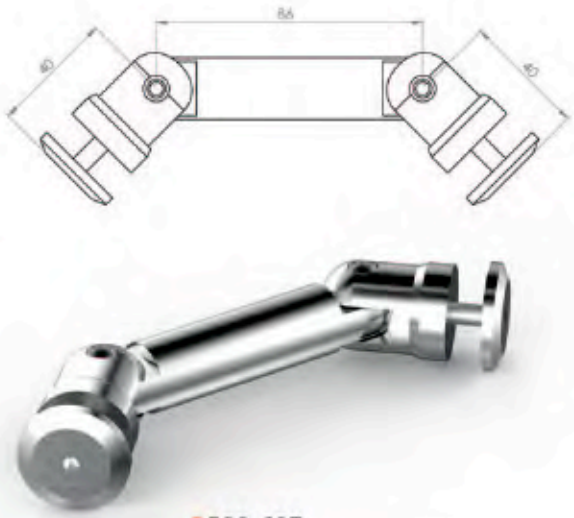

500-623
Double Glass Interconnection Spider

500-621
Glass Aligner (Square)

500-622
Glass Aligner (Round)

100-911
Glass "L" Side Connector-(Ø50)

100-913
Glass "L" Side Connector-(Ø50)

100-910
Glass Side Connector-(Ø50)

100-915
Glass "L" Side Connector-(Ø50)

ALUSMART **A-60** Series

360-513
Elliptic 60x25 Ellow 90°
(Midle Channel)

360-514
Elliptic 60x25 Ellow 45°
(Midle Channel)

360-301
Elliptic 60x25 Wall Flange

360-701
Elliptic 60x25 Plug

260-508
60X25 mm Square Elbow
90°(Midle Channel)

260-509
60X25 mm Square Elbow
45°(Midle Channel)

260-305
60X25 mm Wall Flange

260-702
60X25 mm Square Plug

150-506
50' Bend With Glass
Channel 90°

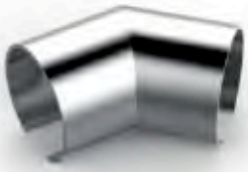

150-508
50' Bend With Glass
Channel 45°

150-302
50' Ground Flange
Externally Screwed

150-704
50' Plug With Channel

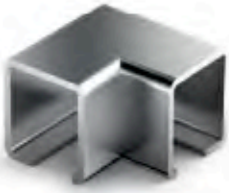

230-502
26X30 mm In Side Corner
For Glass 90°

230-503
26X30 mm Out Side
Corner For Glass 45°

230-301
26X30 mm Wall Flange

230-701
26X30 mm Square Plug

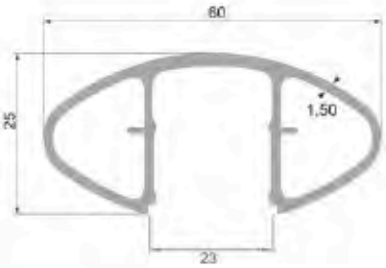

08-078
0,699 Kg/Mt

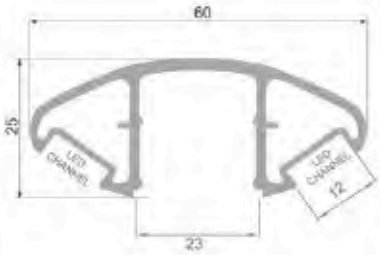

6149
Top Handrail With Led Channel
0,743 Kg/Mt

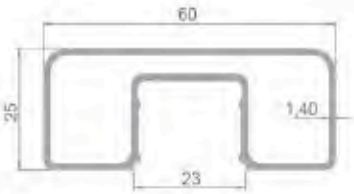

2907
0,775 Kg/M

2995
Glass Cover Profile For Top

2994
Glass Cover Profile For Top

150-518
50° Inward Bend With
Glass Channel 90°

150-519
50° Inward Bend With
Glass Channel 45°

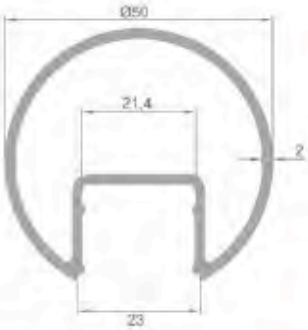

2919
0,980 Kg/M

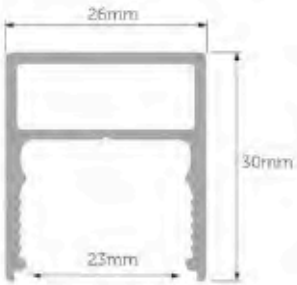

6109
Glass Cover Profile For Top
0,548 Kg/M

500-004
Glass Connection Rubber

500-003
Glass Connection Rubber

akos®

- Easy Installation.
- Unlimited model option.
- Practical solutions for of any kind of complex detection.
- Round, Square and all of the elliptical systems can be used with the Alumax.
- With glass models also create an aesthetic beauty.

- Resistant. Due to the profile cross-section details, it shows high resistance against excessive strain loads.
- Suitable for both indoor and outdoor usage.
- It can be easily used on the oceansides, on exterior facades with high wind load and security in desired interior spaces.

akos®

ALUMAX® 400 Series

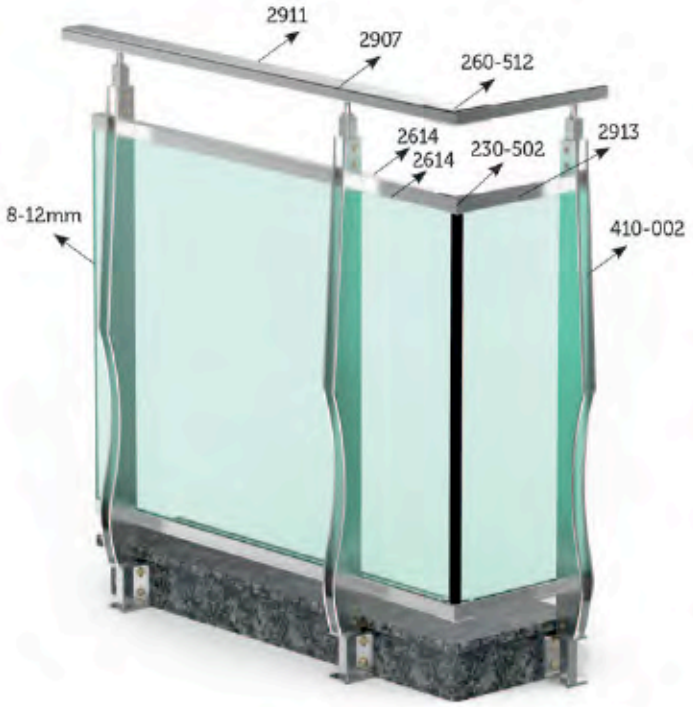

Sofia

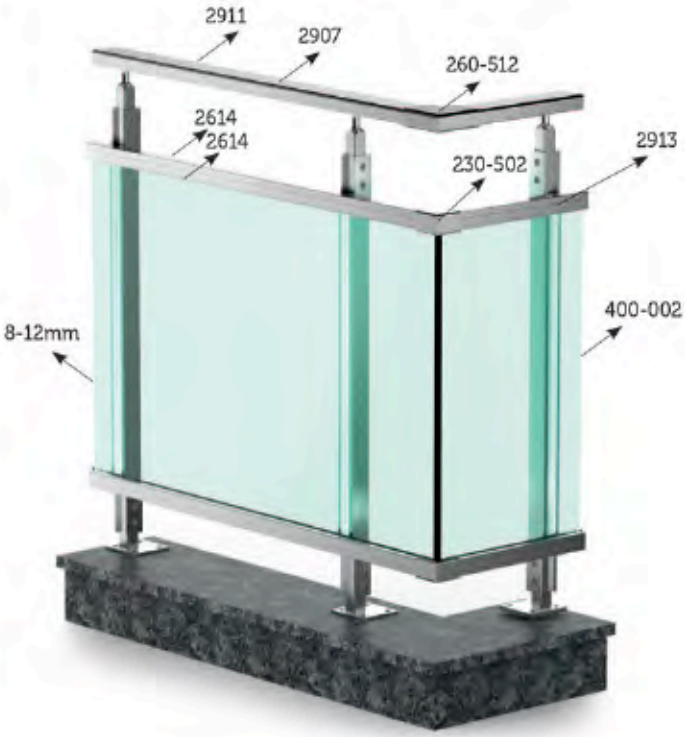

Astana

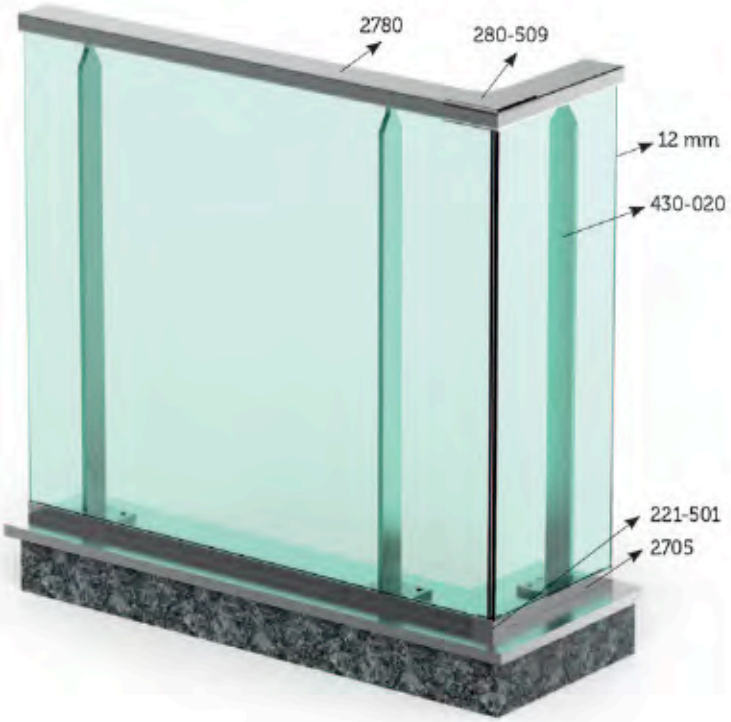

Algeria

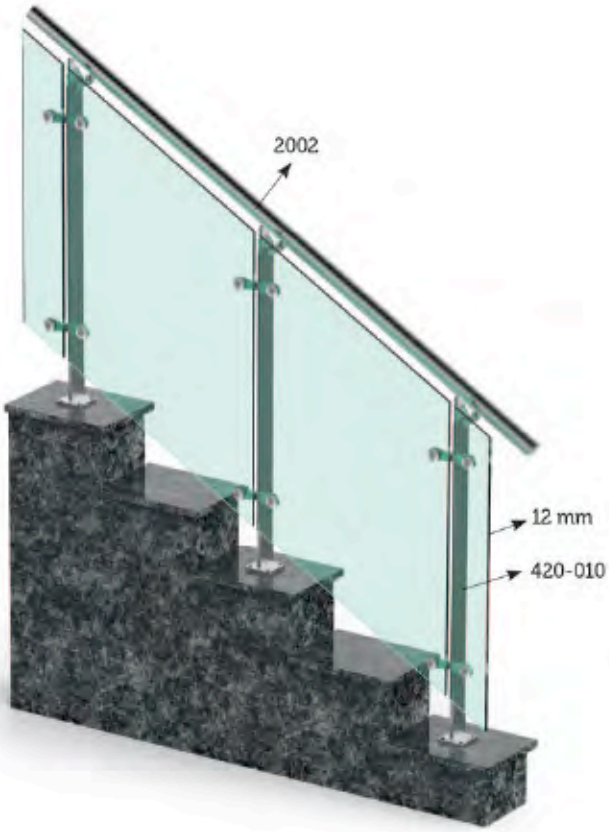

Tbilisi

Cairo

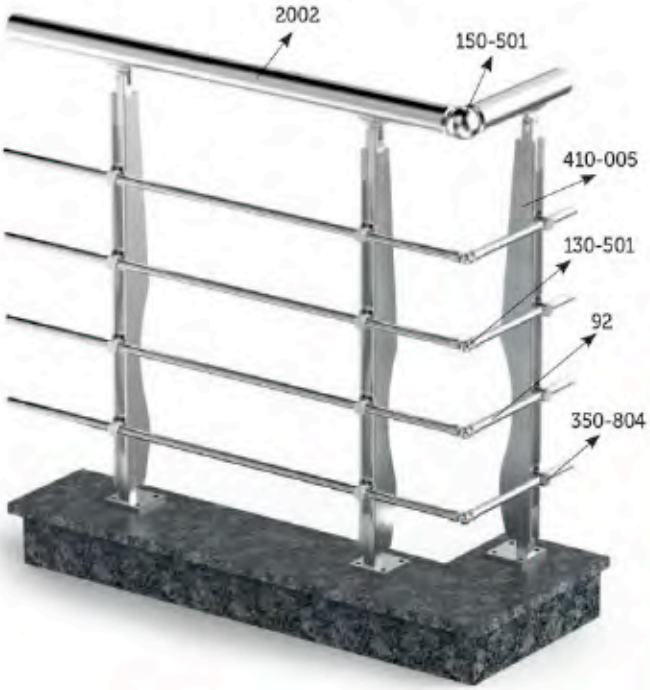

Sarajevo

Rome

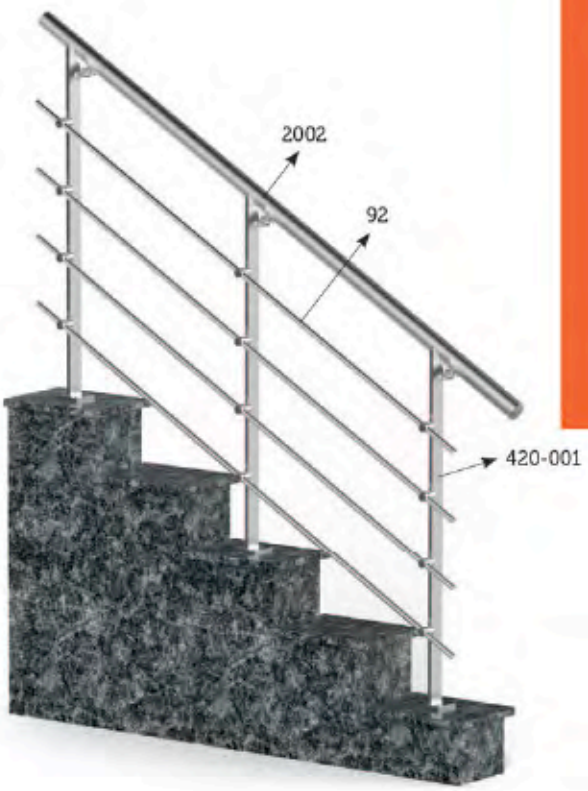

Beirut

ALUMAX E100 series

Please use the QR Code to check the installation video!

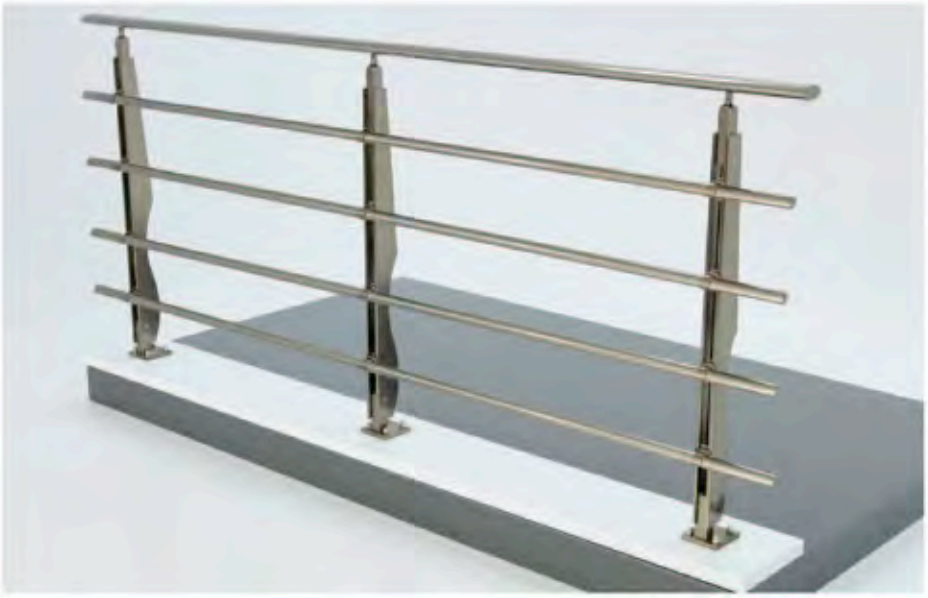

ALUMAX DD100 series

Please use the QR Code to check the installation video!

ALUMAX D200 series

Please use the QR Code to check the installation video!

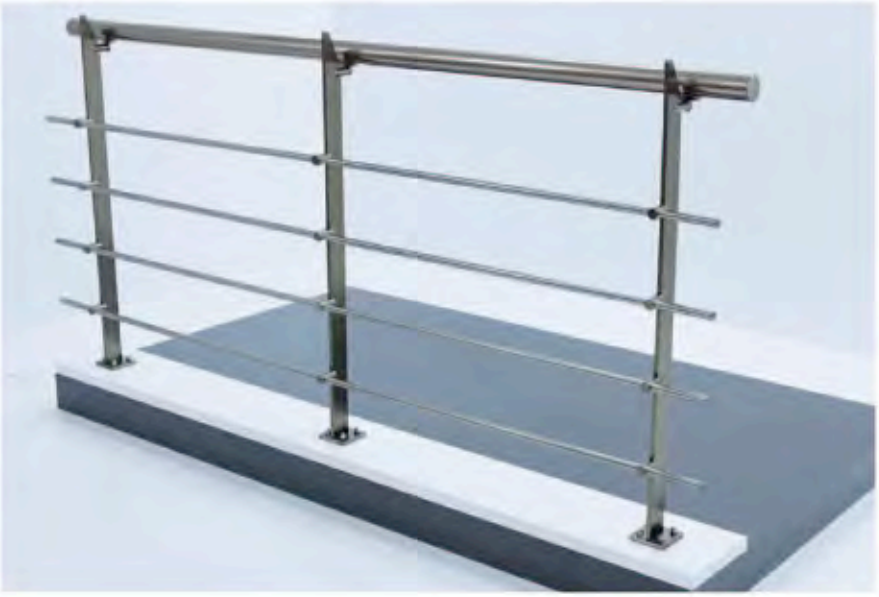

ALUMAX S100 series

Please use the QR Code to check the installation video!

ALUMAX D100 series

Please use the QR Code to check the installation video!

ALUMAX SERIES INSTALLATION VIDEOS

ISTITUTO GIORDANO

TEST REPORT No. 342994

ISTITUTO GIORDANO

TEST REPORT No. 342985

The Alumax Series lama struts are compatible with all upper railing profiles, horizontal barrier profiles and glazing profiles designed in the Akos 100-200-300 series. In addition, all accessories designed for the Akos 100 - 200 - 300 Series, allows for more architectural design using with the Alusmart 400 series lama struts.

Lama Strut With Clips

400-001 (85 cm)
400-002 (95 cm)
400-003 (105 cm)

Lama Strut With Semi Circular (Clips)

400-004 (85 cm)
400-005 (95 cm)
400-006 (105 cm)

400-007

Lama Strut With Wall Connection (Clips)

400-008

Lama Strut With "U" Wall Connection

Ultimate alignment has never been easier!

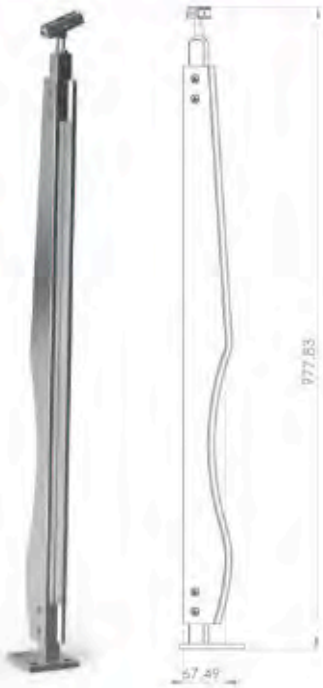

Patterned Lama Strut With (Clips)

410-001 (85 cm)
410-002 (95 cm)
410-003 (105 cm)

Patterned Lama Strut With Semi Circular (Clips)

410-004 (85 cm)
410-005 (95 cm)
410-006 (105 cm)

410-007

Patterned Lama Strut With "U" Wall Connection (Semi Circular + Clips)

410-008

Patterned Lama Strut With Wall Connection (Semi Circular + Clips)

ALUMAX Series

Lama Strut Railing System Application Details

Top in transparency. Maximum of light and space!

460-101
Lama Strut Circular Set

460-102
Lama Strut Circular Set

460-103
Lama Strut Circular Set

Lama Strut With Clips

440-001 (85 cm)
440-002 (95 cm)
440-003 (105 cm)

Lama Strut With Clips

440-010 (85 cm)
440-011 (95 cm)
440-012 (105 cm)

Lama Strut With Clips

440-020 (85 cm)
440-021 (95 cm)
440-022 (105 cm)

Lama Strut With Clips and U Wall Connection

440-004 (85 cm)
440-005 (95 cm)
440-006 (105 cm)

Lama Strut With Clips and U Wall Connection

440-013 (85 cm)
440-014 (95 cm)
440-015 (105 cm)

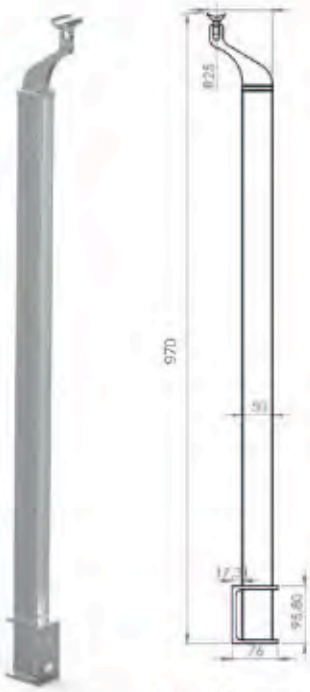

Lama Strut With Clips and U Wall Connection

440-023 (85 cm)
440-024 (95 cm)
440-025 (105 cm)

460-104
Lama Strut Flange

460-105
Lama Strut U Connector

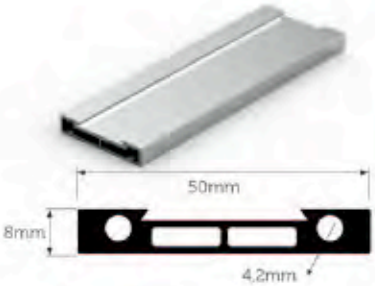

6058
Lama Strut Profile

500-020
M5x40 mm Imbus

"A stylish solution for complex situations."

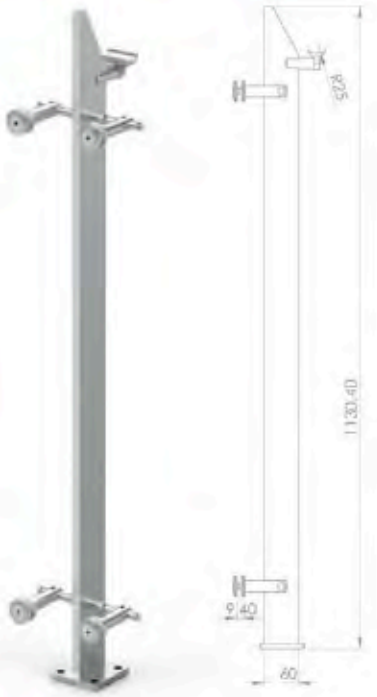

420-021

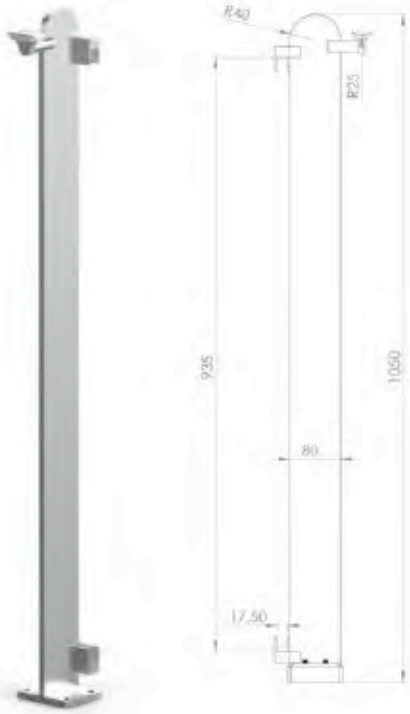

420-020

410-010

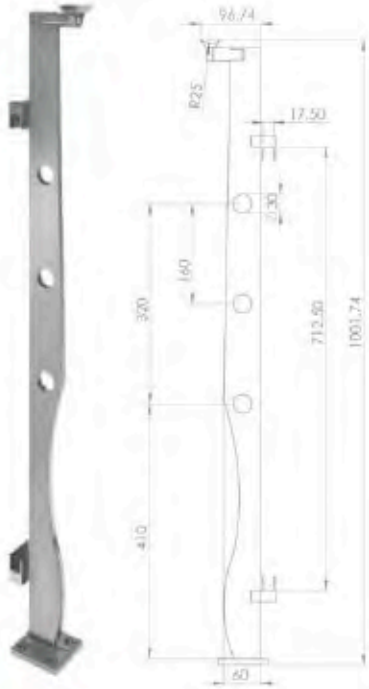

410-011

410-012

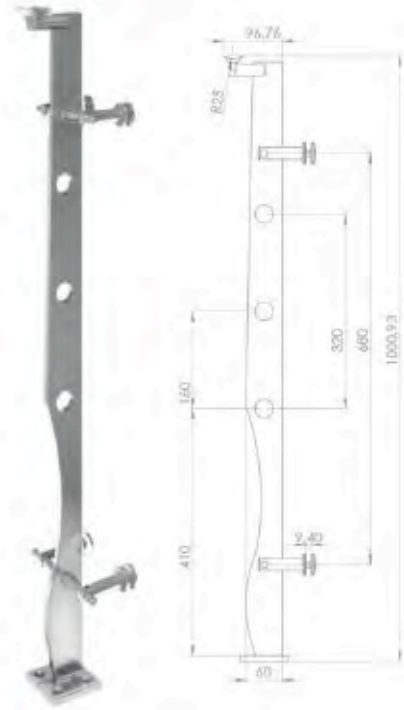

410-013

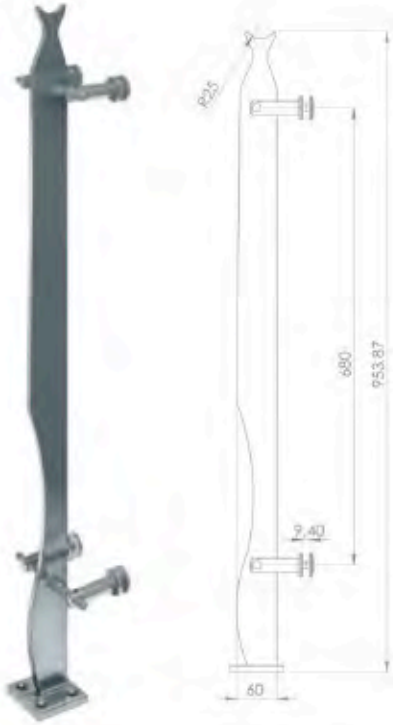

410-020

410-021

410-030

410-031

420-030

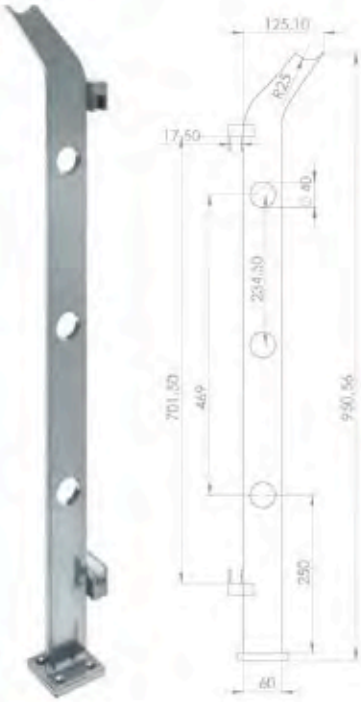

420-031

420-032

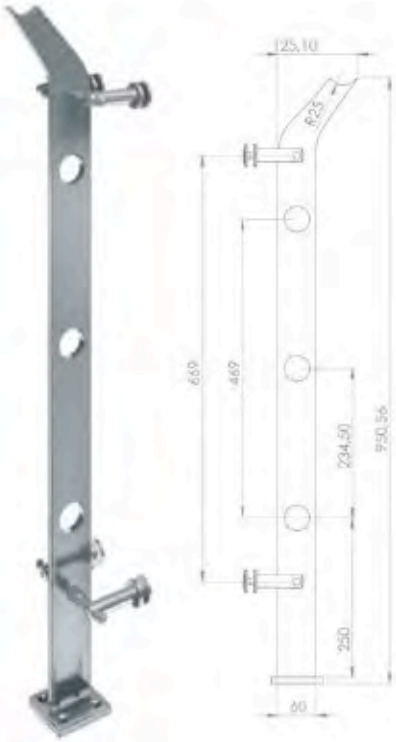

420-033

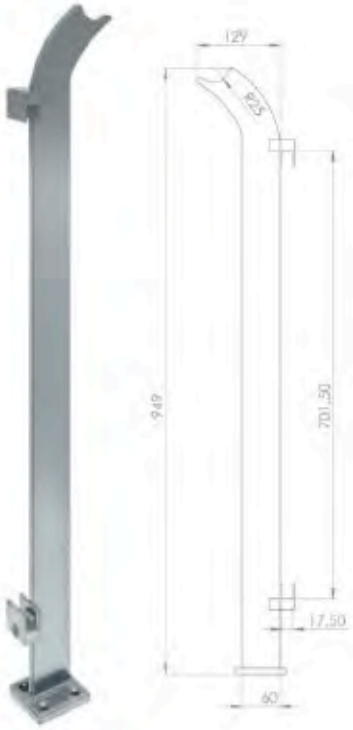

420-040

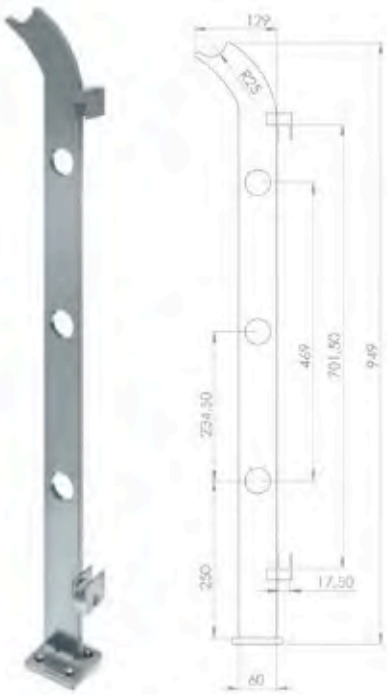

420-041

420-042

420-043

ALUMAX Series

Lama Strut Railing System Application Details

design for indoor or outdoor installations.

100-917
Single Glass Spider

100-916
Both Glass Spider

450-302
Cover For Single Lama

500-013 **500-014**
8 Metric Anchor

500-015 **500-016**
8 Metric Anchor

500-017
15 cm Screw + Dowel

500-026
12 cm 8 metric bolt

500-019
Bolt M8

500-018
Inox Bolt M8x25

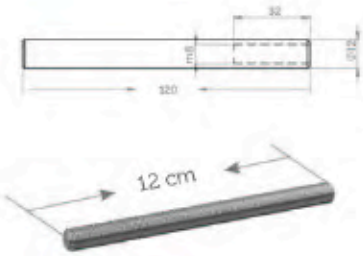

500-027
12 cm 8 metric bolt

450-901
Both Glass Spider

450-902
Single Glass Spider

450-903
Lama Type Horizontal Glass Holder

450-803
Elliptic Pipe Holder

450-801
Round Pipe Holder for 16mm

450-802
Square Pipe Holder for 14X14

450-301
Compression Clip

450-300
Extra Lama Step

ALUMAX Series

Lama Strut Railing System Application Details

Ultimate alignment has never been easier!

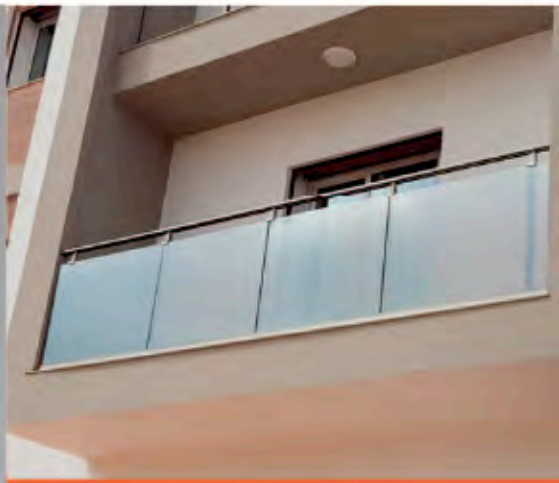

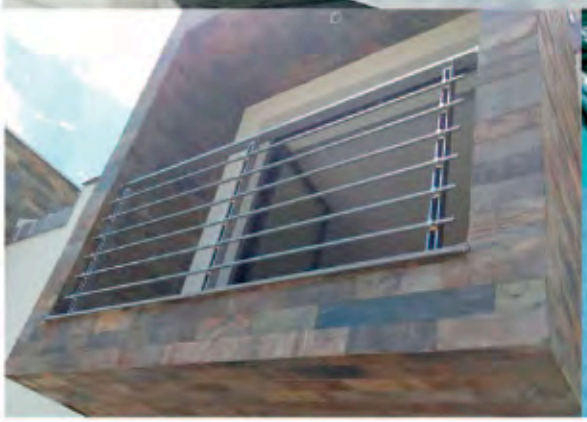

akos®

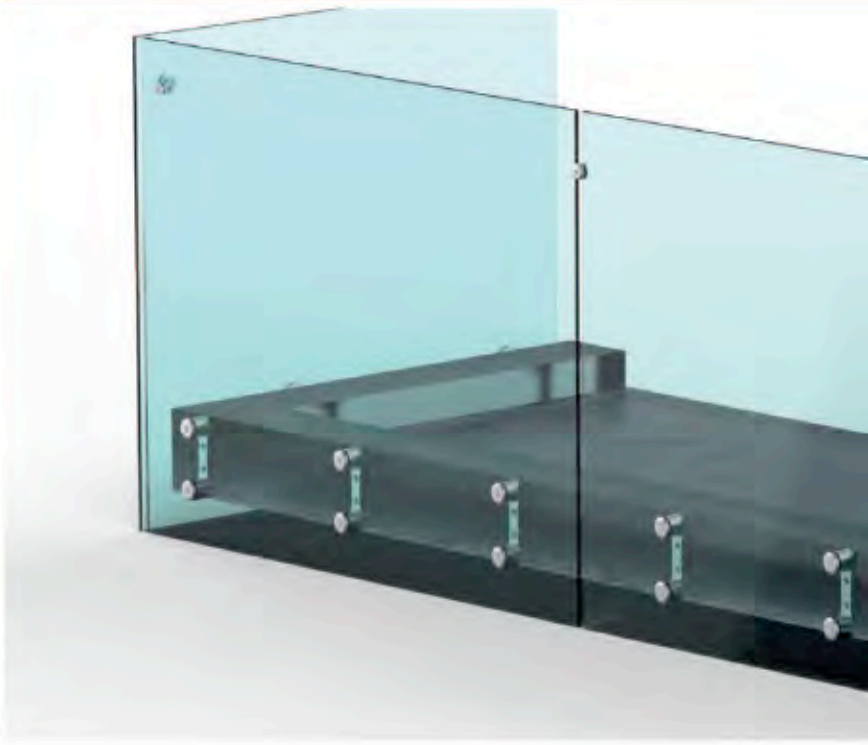

Use of glass panels in AKOS installations A wide range of glass panels can be integrated with AKOS system, in various thicknesses and characteristics according to specifications. There are two main categories according to EN12543 and EN12600 specified by the European Union concerning the thermal treatment of the glass. More specifically, EN12543 specifies the use of tempered and laminated glass with the insert of PVB membranes.

This type of glass panels has the following qualities:

a) In case of breakage, they do not break in large and sharp pieces.

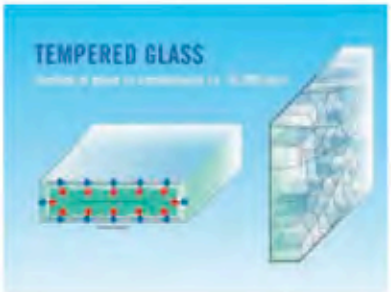

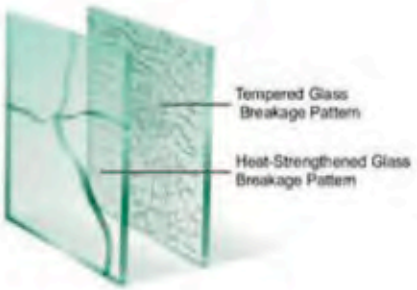

LaminatedGlass TRIPLEX glasswith PVB membrane

b) Even in case of such breakage, the broken glass pieces remain attached on the PVB surface without putting in danger the safety of nearby persons. The fabrication of these tempered and laminated glass panels is being carried out by thermal treatment of ordinary glass which is afterwards sandwiched together with the PVB membranes to give the various grades and thickness of laminated glass panels.

AKOS GLASS

(PVB), placed in layers between the glass.
Rollers press the layers together to expel any air pockets.

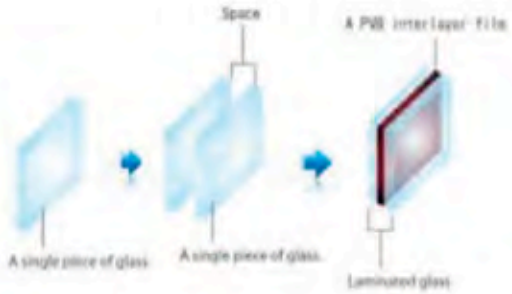

Toughened Glass Thermally Toughenedglass

In the following pictures show the different types of breakage:

a) Tempered and laminated glass, and,
b) Ordinary tempered glass.
PVB films the common characteristics amongst the two categories mentioned previously, are the use of the PVB interlayer films.

AKOS GLASS

The glass is then heated to 70o C in a pressurized oil bath to permanently bond all layers together. Typically, the thickness of each PVB film is 0,38 mm, additional layers of glass and PVB film increase the strength of the material. Applying two interlayers of film, the thickness becomes 0,78 mm, with three at 1,14 mm and so on. Apart from the different thickness of glass and PVB, a wide range of colored PVB, for example grey, blue green or yellow is available, offering a particular esthetique to modern buildings.

According to European Norms (EN 12600) the minimum number of films required is two, however AKOS recommends the use of glass with four PVB films for maximal security. Even in the event that the glass breaks, the two layers are held together by the PVB, allowing the sheet as a whole to bend and absorb the impact. This characteristic is especially important for places where safety or security are paramount. Types of security glasses the most common type Triplex glass consists of the combination of Heat Strengthened Glass – PVB – Heat Strengthened Glass. The result of a Heat Strengthened glass panel will resist two times stronger than ordinary glass, where a unified static force has been applied (EN 12543), to one of the same thickness. The second type of Triplex glass, and the one which meets the safety criteria is Thermally Toughened Glass, and its combination with PVB, known as toughened glass. Toughened Glass is manufactured by subjecting the finished glass size to a heating and cooling treatment which set up high compressive stresses at the surface, and balancing tensile stresses in the center of the glass, thus increasing its strength. The result is a glass that is 5 times stronger than ordinary glass. Heat strengthened glass is produced by a similar process to toughened glass, however, the strength developed is about half that of toughened glass, and its breakage resembles that of annealed glass. AKOS strongly recommends the use of Heat Strengthened Glass with the installation of any type of AKOS system.

- NOTE:Also, AKOS can do some mechanical operations on the glass in the direction of the customer's request. Connection holes, rodaj etc.
- Please contact us regarding Glass and PVB colours.
- The loads are made with wooden boxes for minimal deformation. The weights given are the weight of wooden boxes.

4 + 4 mm Laminated Glass

90 cm GLASS HEIGHT	LENGTH mm (W)	GLASS WIDTH (T)		WEIGHT (KG)
9010-8	100	8	(41,52-4)	1,8
9020-8	200	8	(41,52-4)	3,6
9030-8	300	8	(41,52-4)	5,4
9040-8	400	8	(41,52-4)	7,2
9050-8	500	8	(41,52-4)	9,0
9060-8	600	8	(41,52-4)	10,8
9070-8	700	8	(41,52-4)	12,6
9080-8	800	8	(41,52-4)	14,4
9090-8	900	8	(41,52-4)	16,2
90100-8	1000	8	(41,52-4)	18,0
90110-8	1100	8	(41,52-4)	19,8
90120-8	1200	8	(41,52-4)	21,6

100 cm GLASS HEIGHT	LENGTH mm (W)	GLASS WIDTH (T)		WEIGHT (KG)
10010-8	100	8	(41,52-4)	2
10020-8	200	8	(41,52-4)	4
10030-8	300	8	(41,52-4)	6
10040-8	400	8	(41,52-4)	8
10050-8	500	8	(41,52-4)	10
10060-8	600	8	(41,52-4)	12
10070-8	700	8	(41,52-4)	14
10080-8	800	8	(41,52-4)	16
10090-8	900	8	(41,52-4)	18
100100-8	1000	8	(41,52-4)	20
100110-8	1100	8	(41,52-4)	22
100120-8	1200	8	(41,52-4)	24

110 cm GLASS HEIGHT	LENGTH mm (W)	GLASS WIDTH (T)		WEIGHT (KG)
11010-8	100	8	(41,52-4)	2,2
11020-8	200	8	(41,52-4)	4,4
11030-8	300	8	(41,52-4)	6,6
11040-8	400	8	(41,52-4)	8,8
11050-8	500	8	(41,52-4)	11
11060-8	600	8	(41,52-4)	13,2
11070-8	700	8	(41,52-4)	15,4
11080-8	800	8	(41,52-4)	17,6
11090-8	900	8	(41,52-4)	19,8
110100-8	1000	8	(41,52-4)	22
110110-8	1100	8	(41,52-4)	24,2
110120-8	1200	8	(41,52-4)	26,4

6 + 6 mm Laminated Glass

90 cm GLASS HEIGHT	LENGTH mm (W)	GLASS WIDTH (T)		WEIGHT (KG)
901012	100	12	(61,52-6)	2,7
902012	200	12	(61,52-6)	5,4
903012	300	12	(61,52-6)	8,1
904012	400	12	(61,52-6)	10,8
905012	500	12	(61,52-6)	13,5
906012	600	12	(61,52-6)	16,2
907012	700	12	(61,52-6)	18,9
908012	800	12	(61,52-6)	21,6
909012	900	12	(61,52-6)	24,3
9010012	1000	12	(61,52-6)	27
9011012	1100	12	(61,52-6)	29,7
9012012	1200	12	(61,52-6)	32,4

100 cm GLASS HEIGHT	LENGTH mm (W)	GLASS WIDTH (T)		WEIGHT (KG)
1001012	100	12	(61,52-6)	3
1002012	200	12	(61,52-6)	6
1003012	300	12	(61,52-6)	9
1004012	400	12	(61,52-6)	12
1005012	500	12	(61,52-6)	15
1006012	600	12	(61,52-6)	18
1007012	700	12	(61,52-6)	21
1008012	800	12	(61,52-6)	24
1009012	900	12	(61,52-6)	27
10010012	1000	12	(61,52-6)	30
10011012	1100	12	(61,52-6)	33
10012012	1200	12	(61,52-6)	36

110 cm GLASS HEIGHT	LENGTH mm (W)	GLASS WIDTH (T)		WEIGHT (KG)
1101012	100	12	(61,52-6)	3,3
1102012	200	12	(61,52-6)	6,6
1103012	300	12	(61,52-6)	9,9
1104012	400	12	(61,52-6)	13,2
1105012	500	12	(61,52-6)	16,5
1106012	600	12	(61,52-6)	19,8
1107012	700	12	(61,52-6)	23,1
1108012	800	12	(61,52-6)	26,4
1109012	900	12	(61,52-6)	29,7
11010012	1000	12	(61,52-6)	33
11011012	1100	12	(61,52-6)	36,3
11012012	1200	12	(61,52-6)	39,6

8 + 8 mm Laminated Glass

90 cm GLASS HEIGHT	LENGTH mm (W)	GLASS WIDTH (T)		WEIGHT (KG)
901016	100	16	(81,52-8)	3,6
902016	200	16	(81,52-8)	7,2
903016	300	16	(81,52-8)	10,8
904016	400	16	(81,52-8)	14,4
905016	500	16	(81,52-8)	18
906016	600	16	(81,52-8)	21,6
907016	700	16	(81,52-8)	25,2
908016	800	16	(81,52-8)	28,8
909016	900	16	(81,52-8)	32,4
9010016	1000	16	(81,52-8)	36
9010016	1100	16	(81,52-8)	39,6
9012016	1200	16	(81,52-8)	43,2

100 cm GLASS HEIGHT	LENGTH mm (W)	GLASS WIDTH (T)		WEIGHT (KG)
1001016	100	16	(81,52-8)	4
1002016	200	16	(81,52-8)	8
1003016	300	16	(81,52-8)	12
1004016	400	16	(81,52-8)	16
1005016	500	16	(81,52-8)	20
1006016	600	16	(81,52-8)	24
1007016	700	16	(81,52-8)	28
1008016	800	16	(81,52-8)	32
1009016	900	16	(81,52-8)	36
10010016	1000	16	(81,52-8)	40
10011016	1100	16	(81,52-8)	44
10012016	1200	16	(81,52-8)	48

110 cm GLASS HEIGHT	LENGTH mm (W)	GLASS WIDTH (T)		WEIGHT (KG)
1101016	100	16	(81,52-8)	4,4
1102016	200	16	(81,52-8)	8,8
1103016	300	16	(81,52-8)	13,2
1104016	400	16	(81,52-8)	17,6
1105016	500	16	(81,52-8)	22
1106016	600	16	(81,52-8)	26,4
1107016	700	16	(81,52-8)	30,8
1108016	800	16	(81,52-8)	35,2
1109016	900	16	(81,52-8)	39,6
11010016	1000	16	(81,52-8)	44
11011016	1100	16	(81,52-8)	48,4
11012016	1200	16	(81,52-8)	52,8

10 + 10 mm Laminated Glass

90 cm GLASS HEIGHT	LENGTH mm (W)	GLASS WIDTH (T)		WEIGHT (KG)
9010-20	100	20	-101,521	4,5
9020-20	200	20	-101,521	9
9030-20	300	20	-101,521	13,5
9040-20	400	20	-101,521	18
9050-20	500	20	-101,521	22,5
9060-20	600	20	-101,521	27
9070-20	700	20	-101,521	31,5
9080-20	800	20	-101,521	36
9090-20	900	20	-101,521	40,5
90100-20	1000	20	-101,521	45
90100-20	1100	20	-101,521	49,5
90120-20	1200	20	-101,521	54

100 cm GLASS HEIGHT	LENGTH mm (W)	GLASS WIDTH (T)		WEIGHT (KG)
10010-20	100	20	-101,521	5
10020-20	200	20	-101,521	10
10030-20	300	20	-101,521	15
10040-20	400	20	-101,521	20
10050-20	500	20	-101,521	25
10060-20	600	20	-101,521	30
10070-20	700	20	-101,521	35
10080-20	800	20	-101,521	40
10090-20	900	20	-101,521	45
100100-20	1000	20	-101,521	50
100110-20	1100	20	-101,521	55
100120-20	1200	20	-101,521	60

110 cm GLASS HEIGHT	LENGTH mm (W)	GLASS WIDTH (T)		WEIGHT (KG)
11010-20	100	20	-101,521	5,5
11020-20	200	20	-101,521	11
11030-20	300	20	-101,521	16,5
11040-20	400	20	-101,521	22
11050-20	500	20	-101,521	27,5
11060-20	600	20	-101,521	33
11070-20	700	20	-101,521	38,5
11080-20	800	20	-101,521	44
11090-20	900	20	-101,521	49,5
110100-20	1000	20	-101,521	55
110110-20	1100	20	-101,521	60,5
110120-20	1200	20	-101,521	66

- Minimalist Design! Thanks to the extreme simplicity and minimal nature of the fusion line series, it actually works really well as a visual element.

- Reliable safety! Akos Elliptical railings perform extremely well, providing utmost safety and protection.

- Easy & Fast Installation! Elliptical railings are carefully designed to help installers benefit from quick and easy installations at all stages of their placement.

akos®

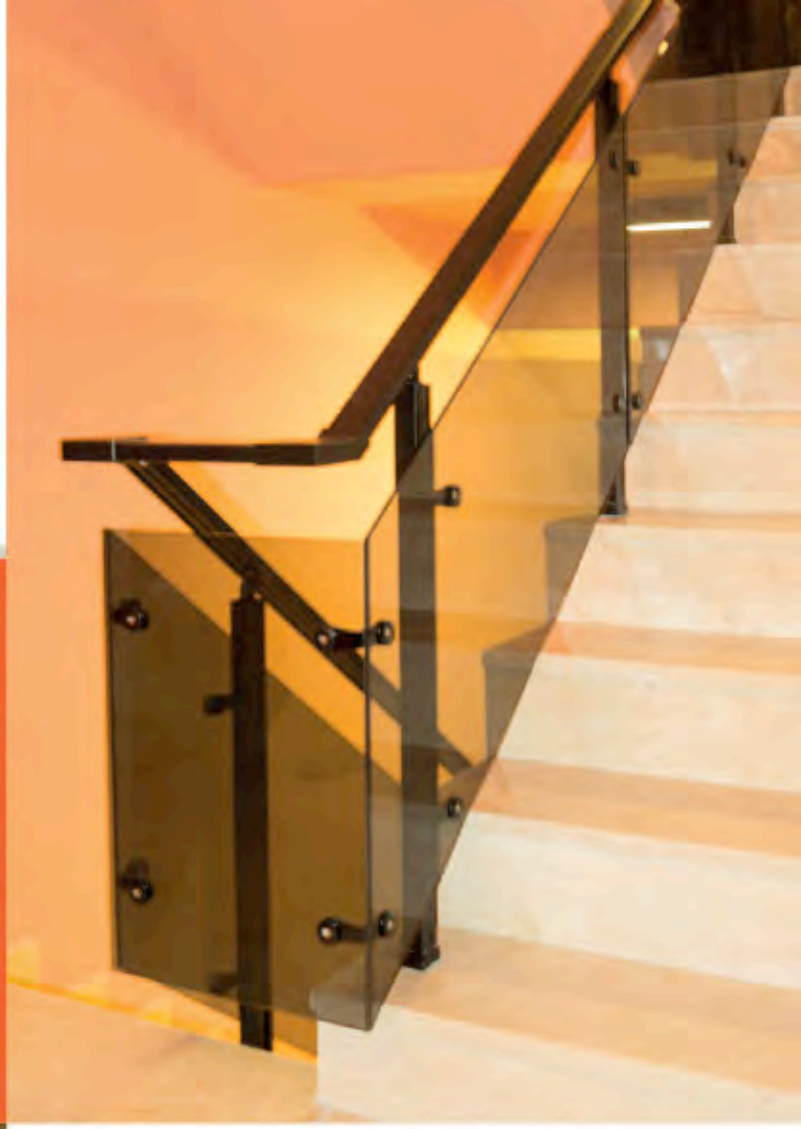

- It is produced squarely and minimizes the risk of injury in crashes thanks to its unsharp corner profile design.

- It offers safer and more aesthetic solutions for those who can not give up on square designs.

- An extensive number of accessories and profiles, anodizing according to seaside class standards make any kind of application possible.

- The system is certified for its sound engineering design by international institutes. Due to their high resistance to severe weather conditions, AKOS railings can be seen in all five continents.

SQUARLINE® 200 Series

Baghdad

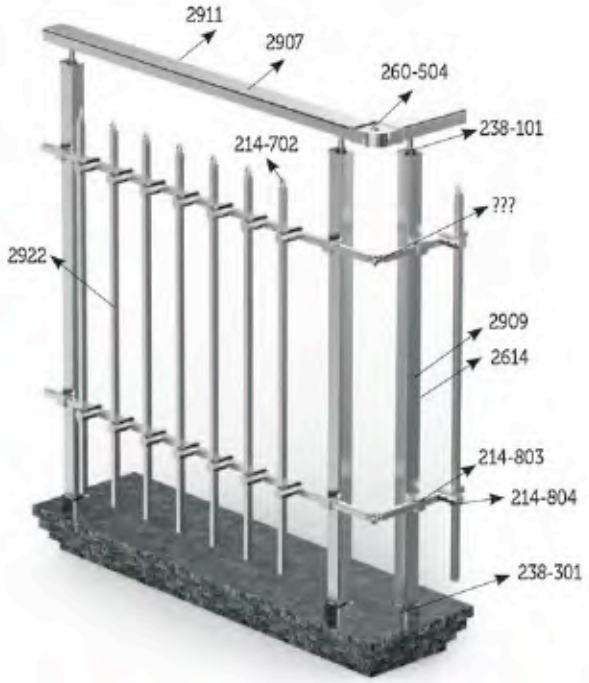

Abuja

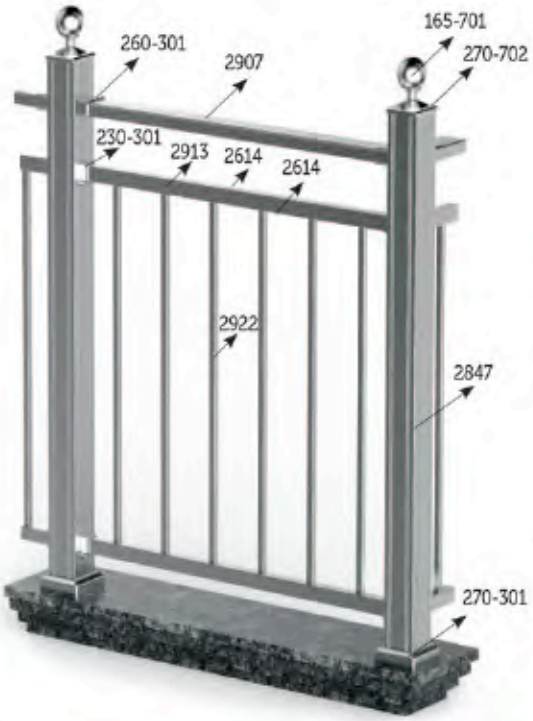

Athens

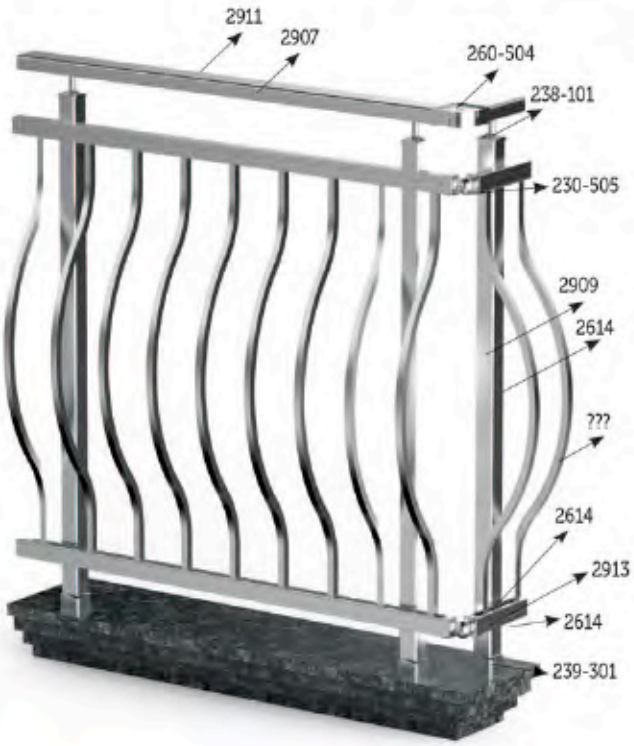

Belgrade

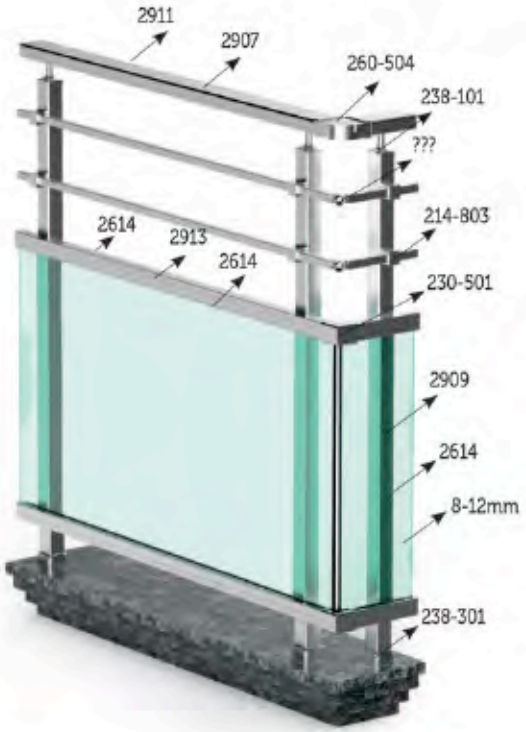

Jerusalem

London

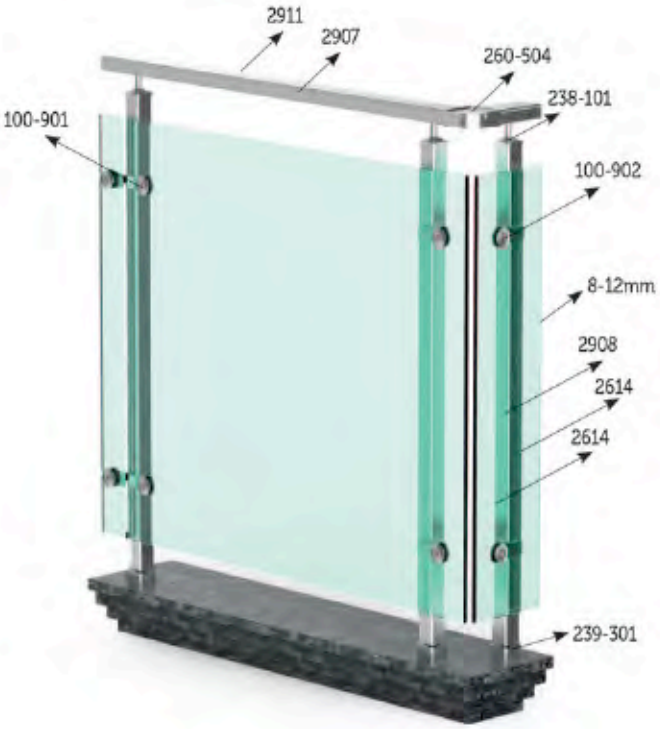

Tunisia

Pristina

SQUARLINE Series

238-101
38,5X38,5 mm Semi Circular Set

238-102
38,5X38,5 mm Semi Circular Set - Q50

238-103
38,5X38,5 mm Semi Circular for Corner

238-104
Secret Semi Circular

238-105
Eccentric Semi Circular Set

238-701
38,5X38,5 mm Square Strut Cover

238-301
38,5X38,5 mm Strut Flange

238-302
38,5X38,5 mm "U" Style Strut Flange

238-401
38,5X38,5 mm "U" Strut Side Connector

238-402
38,5X38,5 mm "U" Strut Side Connector-Long

238-405
38,5X38,5 mm Extension Apparatus

260-501
60X25 mm Square Elbow
With Horizontal Moving

260-502
60X25 mm Square Elbow
With One Side Moving

260-503
60X25 mm Square Elbow
With Vertical Moving

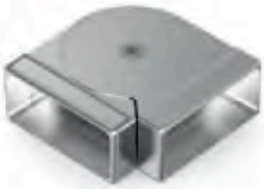

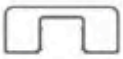

260-504
60X25 mm Square Elbow
With Side Moving

260-601
60X25 mm Ring

260-702
60X25 mm Square Plug

260-506
60X25 mm Square Elbow
90°(Out Side Channel)

260-507
60X25 mm Square Elbow
45°(Out Side Channel

260-508
60X25 mm Square Elbow
90°(Midle Channel

260-509
60X25 mm Square Elbow
45°(Midle Channel)

260-510
60X25 mm Square Elbow
90°(In Side Channel

260-511
60X25 mm Square Elbow
45°(In Side Channel)

260-512
60X25 mm Square Elbow
90°(Without Channel

260-513
60X25 mm Square Elbow
45°(Without Channel)

260-301
60X25 mm Wall Flange

260-302
60X25 mm Vertical Wall
Connection

260-303
60X25 mm Adjustable
Wall Flange

260-304
60X25 mm Vertical
Wall Connection

260-515
60X25 mm Square Elbow
With Horizontal Moving

260-516
60X25 mm Square Elbow
With Both Side Moving

260-517
60X25 mm Square Elbow
With One Side Moving

260-518
60X25 mm Square Elbow
With Vertical Moving

260-305
60X25 mm Wall Flange

280-501
80X30 mm Square Elbow
With Both Side Moving

280-502
80X30 mm Square Elbow
With One Side Moving

280-503
80X30 mm Square Elbow
With Vertical Moving

280-504
80X30 mm Square Elbow
With Horizontal Moving

280-505
80X30 mm Square Elbow
90°(Out Side Channel)

280-506
80X30 mm Square Elbow
45°(Out Side Channel)

280-507
80X30 mm Square Elbow
90°(Midle Channel)

280-508
80X30 mm Square Elbow
45°(Midle Channel)

280-511
80X30 mm Square Elbow
90°(Without Channel)

280-512
80X30 mm Square Elbow
45°(Without Channel)

280-302
80X30 mm Vertical Wall
Connection

280-303
80x30 mm Adjustable
Wall Flange

280-301
80X30 mm Wall Flange

280-304
80X30 mm Wall Flange

280-601
80x30 mm Ring

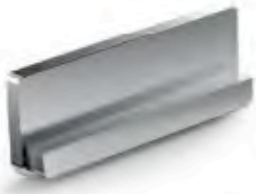

280-701
80x30 mm Square Plug

230-501
26X30 mm Out Side Corner For Glass 90°

230-502
26X30 mm In Side Corner For Glass 90°

230-503
26X30 mm Out Side Corner For Glass 45°

230-504
26X30 mm In Side Corner For Glass 45°

230-505
26X30 mm Square Profile Corner

230-301
26X30 mm Wall Flange

230-701
26X30 mm Square Plug

230-702
26X30 mm Plug (External)

221-501
22X16 mm Corner for Glass 90°

221-502
22X16 mm Corner for Glass 45°

221-601
22X16 mm Ring

221-701
22X16 mm Plug

214-501
14X14 mm Elbow 90°

214-505
14X14 mm Adjustable Elbow

214-502
14X14 mm Elbow 45°

214-506
14X14 mm Adjustable Elbow

214-503
14X14 mm Adjustable Elbow (Vertical)

214-504
14X14 mm Adjustable Elbow (Horizantal)

214-601
14X14 mm Ring

214-701
14X14 mm Plug

214-702
14X14 mm Decorative Plug

214-703
14X14 mm Decorative Plug

214-801
14X14 mm Pipe Handle
Moving Plain

214-802
14X14 mm Pipe Handle

214-803
14X14 mm Pipe Handle

214-804
14X14 mm Pipe Handle
With Both Side

214-605
14X14 mm Jumbo Safety
Pipe

214-606
14X14 mm Jumbo Safety
Pipe

100-901
Spider Glass Holder-Both
Side

100-902
Spider Glass Holder-One
Side

200-903
Glass Holder for Square

200-904
Glass Holder for Square

200-907
Horizontal Glass Holder

200-908
Spider Glass Holder for 14X14

SQUARLINE Series

270-001
70X70 mm Strut Profile
Set (110 cm)

270-002
100X100 mm Strut Profile
Set (110 cm)

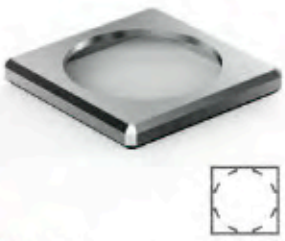

270-702
70X70 mm Decorative Cover

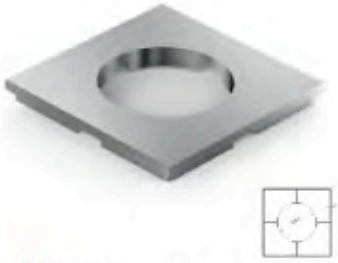

270-703
100X100 mm Decorative Cover

165-701
65 mm Knop

165-702
65 mm Crystal Knop

270-301
70X70 mm Ground Flange

270-302
100X100 mm Ground Flange

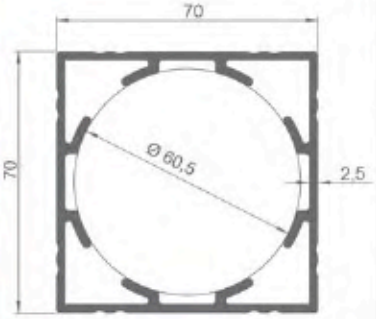

2815
2,422 Kg/M

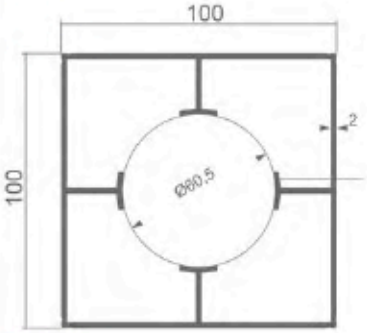

2947
2,700 Kg/M

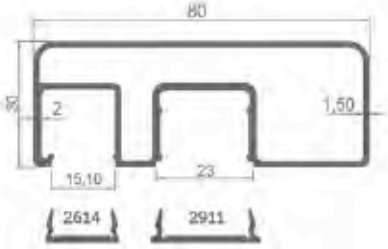

2905
1.174 Kg/M

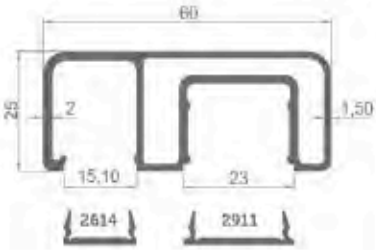

2906
0.945 Kg/M

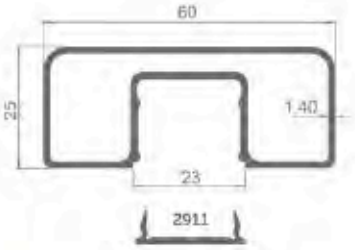

2907
0.775 Kg/M

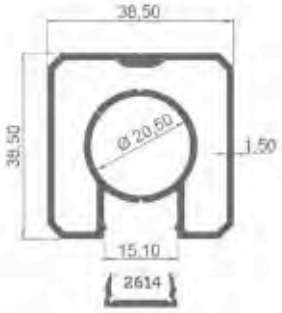

2909
0,910 Kg/M

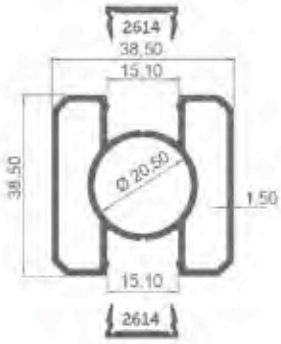

2908
0,900 Kg/M

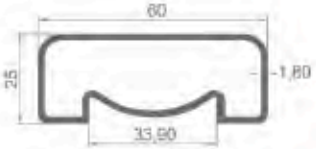

2600
1.002 Kg/M

2911
0,119 Kg/M

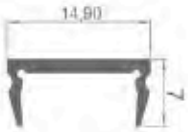

2614
0,088 Kg/M

2913
0,620 Kg/M

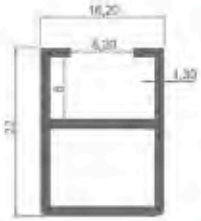

2705
0,267 Kg/M

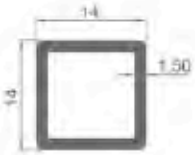

2922
0,201 Kg/M

2918
1.002 Kg/M

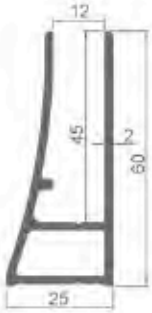

2917
0,892 Kg/M

SQUARLINE Series

akos®

Most common railing type all around the World! Classical 100 is suitable for old and new structures. Akos provides all kind of round accessories and profiles with anodized and painted quality!

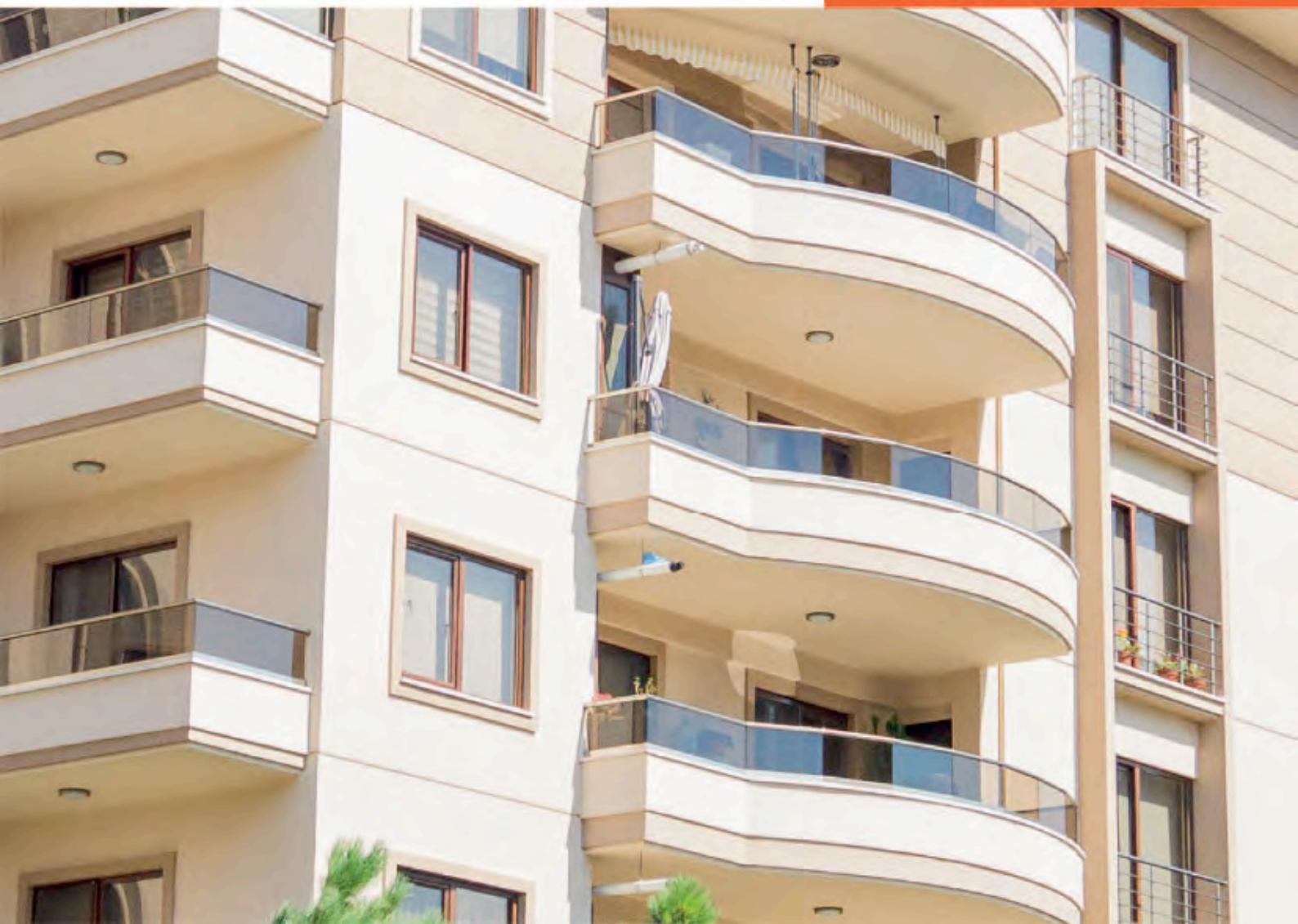

- Easy and fast application possibility for old and new constructions.
- Possibility to use with panes made of different materials.
- Different colors and patterns applied to profiles and panels that used.
- Aesthetic appearance by concealing support and connection points with special accessories.

CLASSICAL® 100 Series

Offering services in the sector for 15 years, Özgüller Aluminum Railing Systems has created its new brand 'AKOS' aiming at improving our years long experience and customer satisfaction with consciousness obtained from our valuable customer through a more practical and ergonomic product concept.
With "AKOS" brand , that its meaning also contains

A

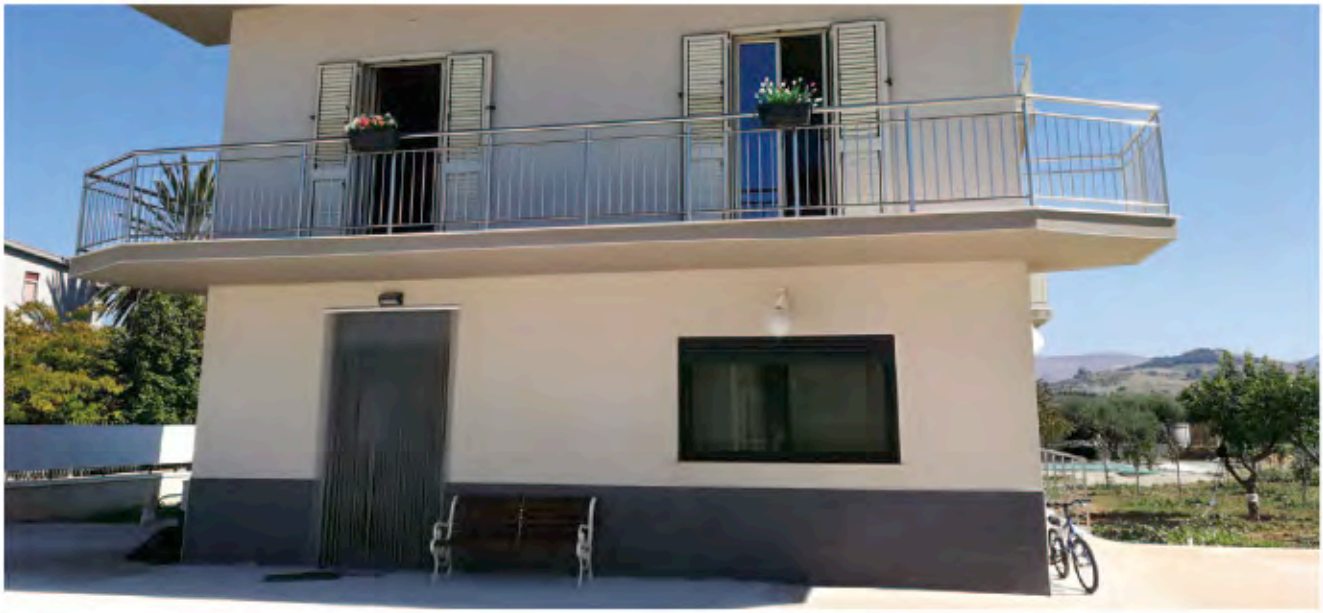

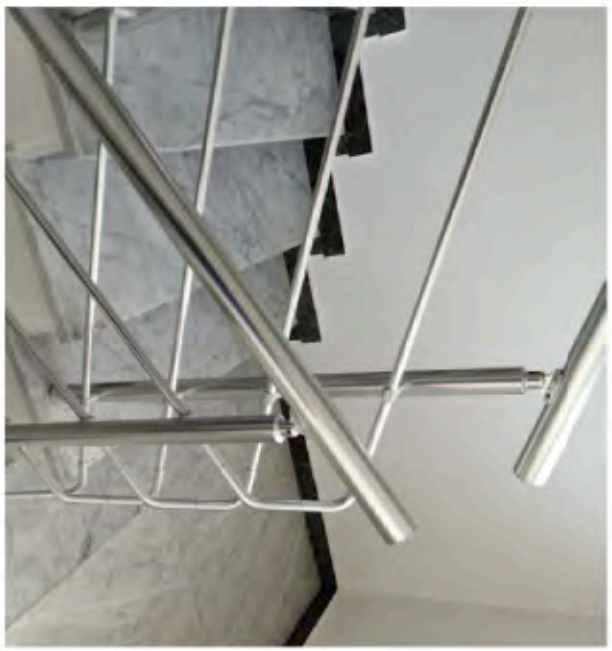

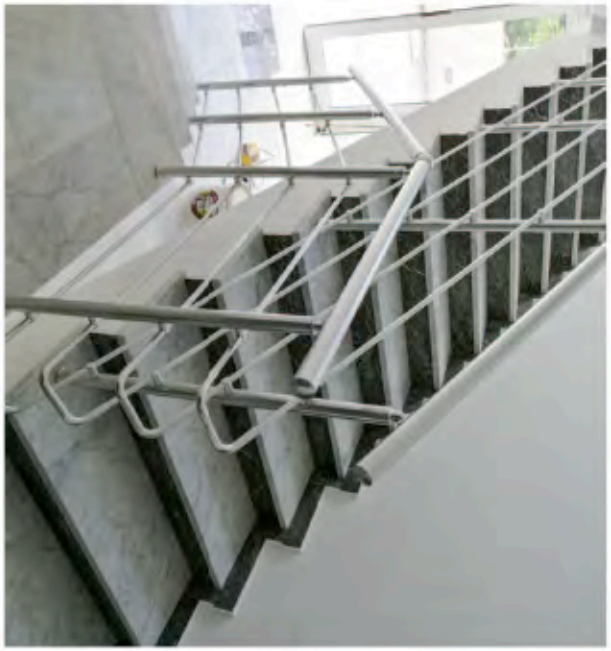

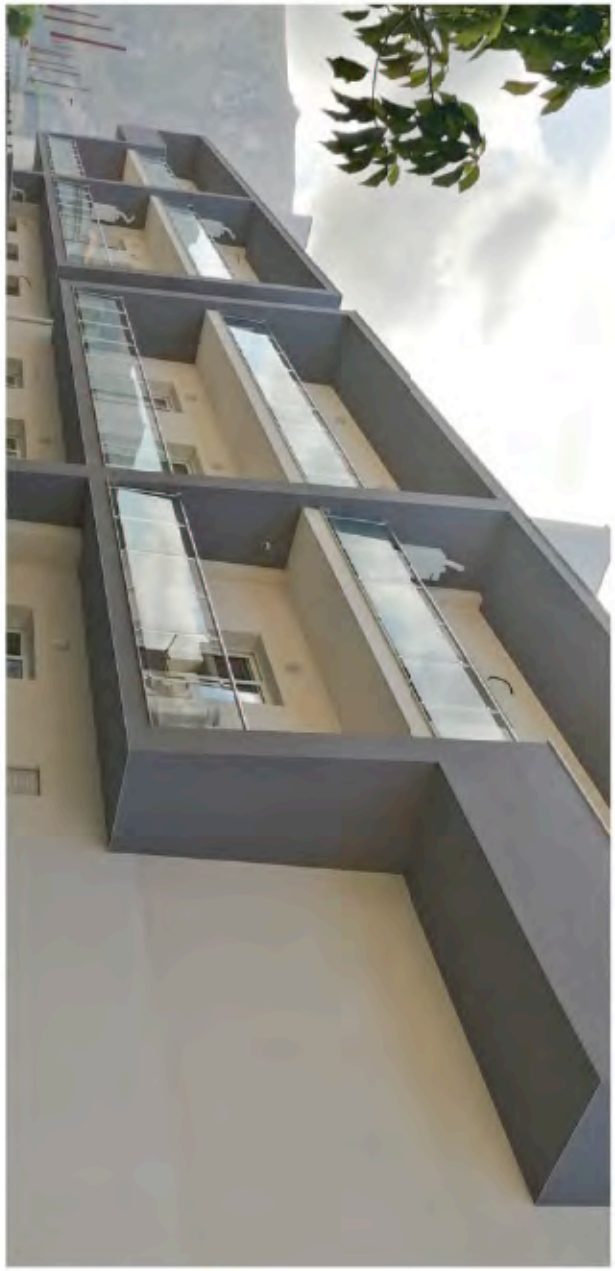

CLASSICAL Series

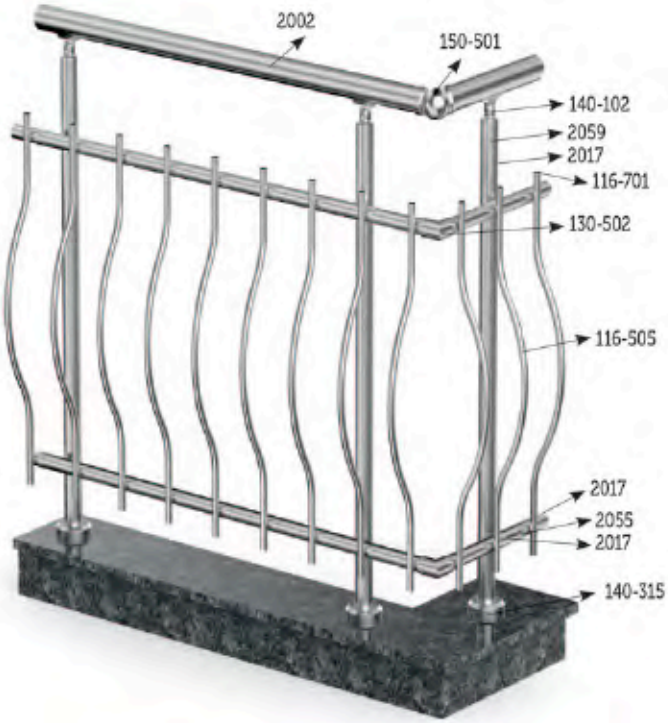

Ottowa

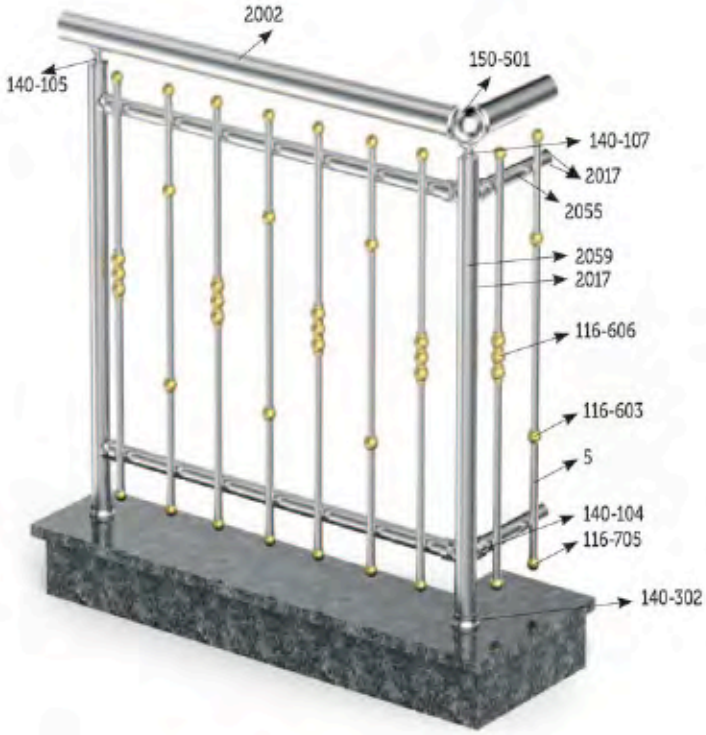

Skopje

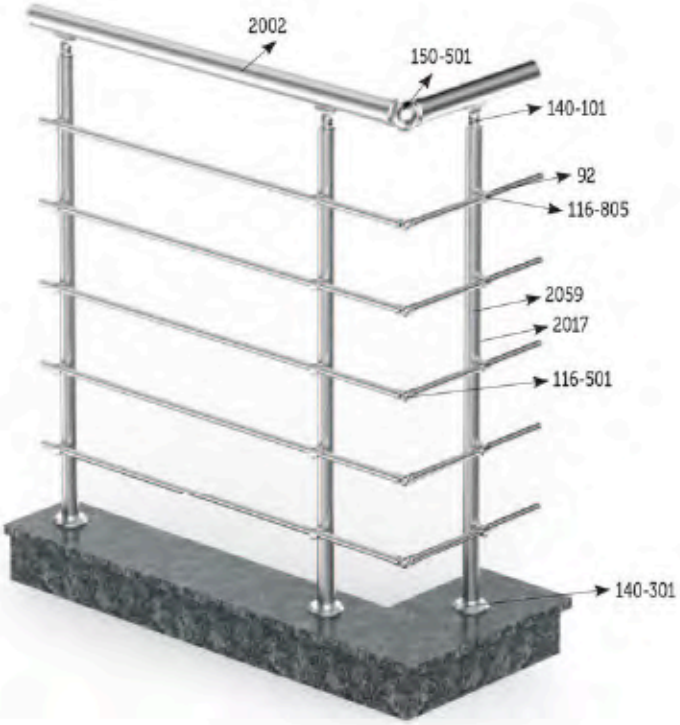

Oslo

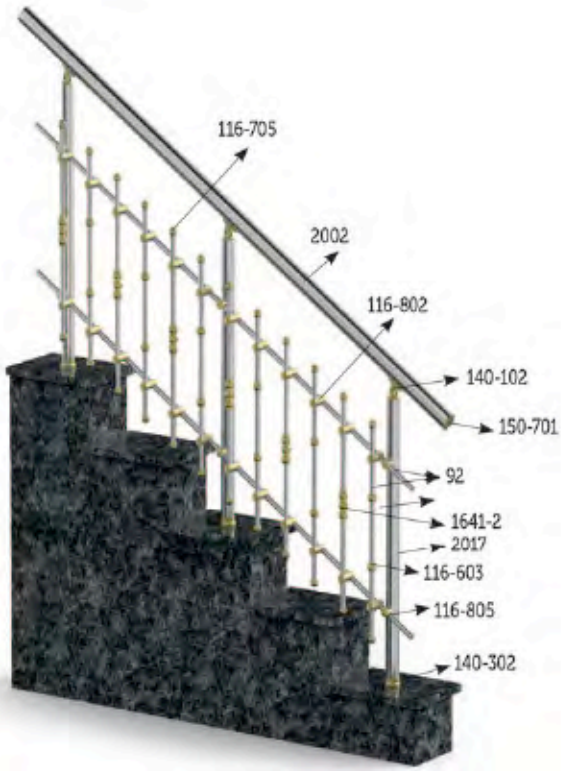

Vienna

Tehran

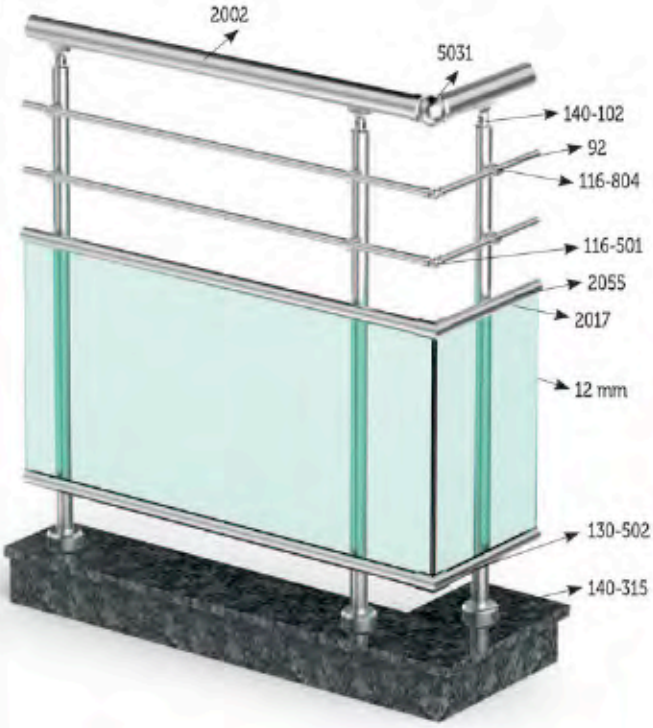

Zagreb

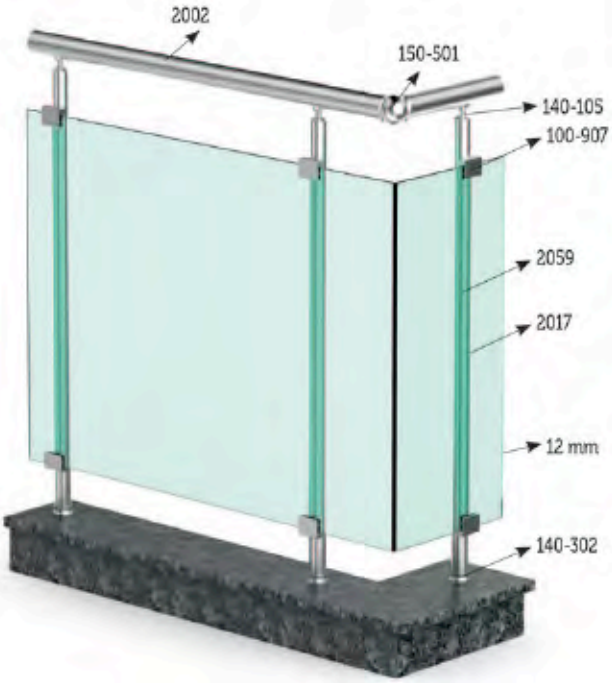

Washington

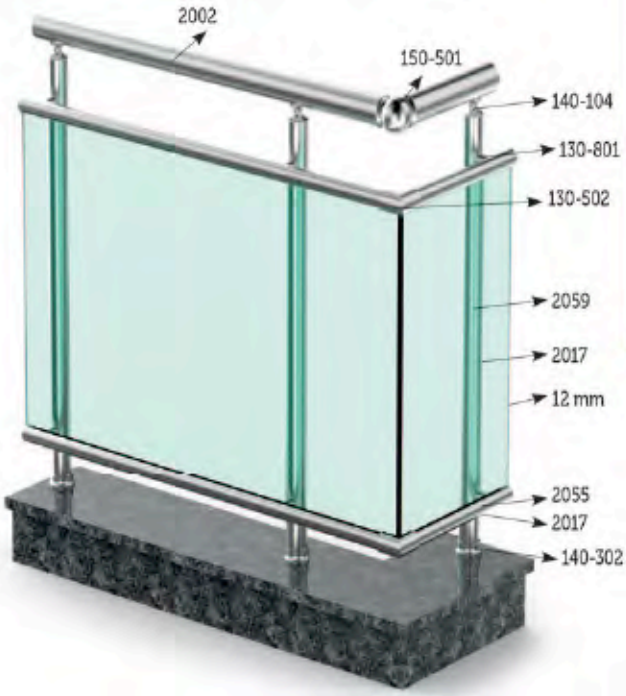

Baku

CLASSICAL Series

140-101
40' Semi Circular Set With Joint

140-102
40' Semi Circular Set With Joint (Capped)

140-109
40' Semi Circular Set With Joint (Capped atterned)

140-103
40' Akos Semi Circular Set With Joint

140-104
40' Semi Circular Joint (Capped)

140-105
40' Semi Circular Joint (Capped)

140-110
40' Long Semi Circular Joint

140-107
Semi Circular Joint

140-108
Eccentric Semi Circular Set

140-301
40' Flange With Anchor (100 mm)

140-320
40' Flange With Anchor (80 mm)

140-302
40' Ground Flange Without Tooth

140-303
40' Ground Flange With Single Tooth

140-304
40' Ground Flange With Double Tooth

140-305
40' Ground Flange With Single Tooth (Patterned)

140-306
40' Ground Flange With Double Tooth (Patterned)

140-307
40' Long Ground Flange (9 cm)

140-308
40' Flange Patterned Serrated (10 cm)

140-321
40' Flange Patterned Serrated (10 cm)

140-315
40' Flange Patterned Serrated (10 cm)

140-316
40' Flange Patterned Serrated (10 cm)

140-317
40' Flange Patterned Serrated (10 cm)

140-318
40' Flange Patterned Serrated (10 cm)

140-319
40' Flange Patterned Serrated (10 cm)

140-314
40' Decorative Flange

150-509
50' Sphere Elbow

150-510
50'Smart Sphere Elbow

140-311
40' Ground Flange Externally Screwed (Long)

140-312
40' Ground Flange Externally Screwed

140-313
40' Ground Flange Cover

140-401
40' Wall "T" Connection Long (9,5 cm)

140-402
40' Wall "T" Connection (2,5 cm)

140-403
40' Strut Side Connector "U" (h=9,5cm)

140-404
40' Strut Side Connector "U" (h=12 cm)

140-405
40' Extension Apparatus

140-701
40' Plug

140-702
40' Knop

150-101
50' Semi Circular Set (External)

150-102
50' Semi Circular Set

150-105
50' Semi Circular

150-107
50' Semi Circular Set (External Patterned)

150-521
50' Inward Bend 45°

150-520
50' Inward Bend 90°

150-104
50' Semi Circular (Internal)

150-308
50' Wall Flange (Single Hole)

150-106
50x50 mm Slotted Joint

150-301
50' Ground Flange
Externally Screwed (Long)

150-302
50' Ground Flange
Externally Screwed

150-303
50' Wall Flange
(Double Hole)

150-304
50' Ground Flange Cover

150-305
50' Adjutable Wall Flange

150-306
50' Adjutable Wall Flange
(External)

150-307
50' Extension Apparatus

150-501
50' Smart Sphere Elbow

150-502
50' Smart Sphere Elbow
(ECO)

150-507
50' Sphere Elbow

150-503
50' Inflate Bend 90°

150-504
50' Inflate Bend 45°

150-506
50' Bend With Glass
Channel 90°

150-508
50' Bend With Glass
Channel 45°

150-601
50' Smart Pipe Connector

CLASSICAL Series

150-602
50' Pipe Connection Apparatus

150-603
50' Ring (3 cm)

150-604
50' Ring (5 cm)

150-401
50' Wall Connector "T"

150-402
50' Pipe Anchor Connector

150-701
50' Plug

150-705
50' Economic Plug

150-704
50' Plug With Channel

150-702
50' Knob

150-703
50' Crystal Knob

160-501
60' Sphere Elbow

160-601
60' Ring

160-701
60' Plug

160-301
60' Wall Flange

165-701
65' Knob

165-702
65' Crystal Knob

165-301
65' Ground Flange (Thick)

165-302
65' Wall Flange

165-401
65' Pipe Anchor Connector (12,5 cm)

130-101
30' Semi Circular Set (Internal)

130-106
30' Semi Circular Set (External)

130-102
30' Semi Circular (Internal)

130-103
30x30 Semi Circular (External)

130-104
30x40 Semi Circular (External)

130-105
30x50 Semi Circular (External)

130-301
30' Ground Flange

130-501
30' Sphere Elbow

130-601
30' Ring

130-701
30' Plug

130-702
30' Knog

130-801
30x30 Interconnection

130-802
30x40 Interconnection

130-803
30x50 Interconnection

130-703
30' Plug (Externaly)

130-502
30' Bend With Glass Channel 90°

130-503
30' Bend With Glass Channel 45°

CLASSICAL Series

130-401
30' Single Curtain Accessories

130-402
30' Double Curtain Accessories

116-701
16' Plug

116-702
16' Knob

116-703
16' Decorative Knob

116-704
16' Decorative Knob

116-705
16' Plug (Externaly)

116-801
16' Pipe Handle Set

116-802
16' Pipe Double Handle Set

116-803
16' Pipe Handle

116-804
16' Pipe Handle

116-805
16' Pipe Handle (ECO)

116-501
16' Sphere Elbow

116-502
16' Elbow 90°

116-503
16' Elbow 45°

116-301
16' Ground Flange Externaly

116-302
16x30 Slotted Wall Flange

116-303
16x40 Slotted Wall Flange

116-304
16x50 Slotted Wall Flange

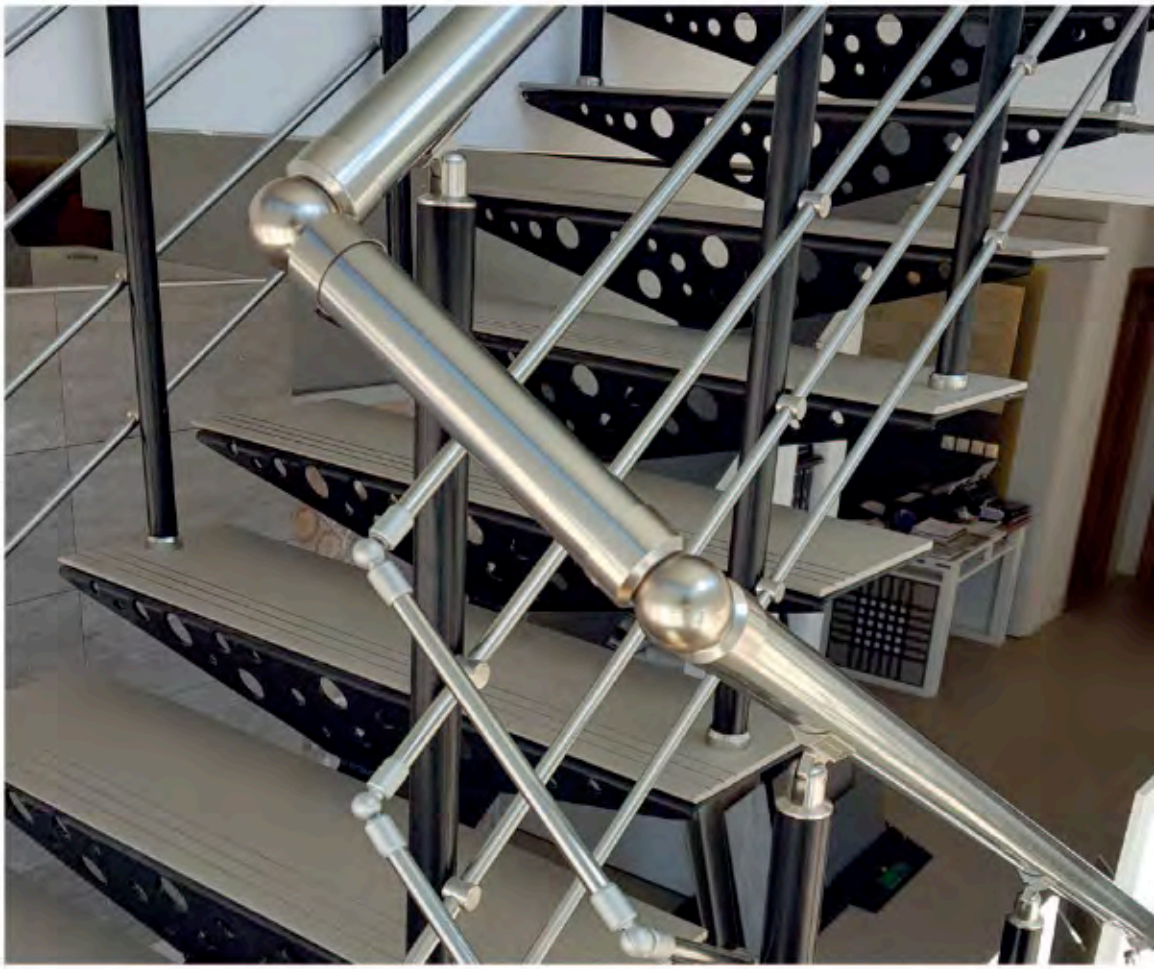

116-305
16' Wall Flange

116-601
16' Ring

116-602
16' Intermediate Connector

116-809
16' Pipe Handle

116-603
16' Single Decorated Sphere

116-604
16' Decorated Sphere

116-606
16' Decorated Sphere

116-605
16' Jumbo Safety Pipe

100-901
Spider Glass Holder-Both Side

100-902
Spider Glass Holder-One Side

100-903
Glass Holder for Round

100-904
Glass Holder for Round

100-905
Glass Holder for Round

100-907
Horizontal Glass Holder

100-906
Glass Holder

100-908
Spider Glass Holder

100-909
Glass to Wall Connector (Ø30)

100-912
Glass Side Connector (Ø50)

100-911
Glass "L" Side Connector-(Ø50)

100-913
Glass "L" Side Connector-(Ø50)

100-910
Glass Side Connector (Ø50)

100-201
Wall "L" Side Connector (Ø50)

CLASSICAL Series

100-202
Wall Connector Set (Ø50)

100-203
Wall "L" Combine Combine Unit 90° (Ø50)

100-204
Wall "L" Combine Combine Unit 45° (Ø50)

100-205
Wall "L" Combine Combine Unit 90° (Long) (Ø50)

100-206
Anchor With Screw 20 Cm

100-207
Door Hingle

100-208
Door Latch

100-210
Aluminium Anchor (Whole) (40 cm)
100-211
Aluminium Anchor (Whole) (30 cm)
100-212
Aluminium Anchor (Whole) (20 cm)
100-213
Aluminium Anchor (Whole) (15 cm)

100-215
Hollow Anchor (ECO) (40 cm)
100-216
Hollow Anchor (ECO) (30 cm)
100-217
Hollow Anchor (ECO) (20 cm)
100-218
Hollow Anchor (ECO) (15 cm)

100-220
Whole Anchor (40 cm)
100-221
Whole Anchor (30 cm)
100-222
Whole Anchor (20 cm)
100-223
Whole Anchor (15 cm)

100-001
Pistol for 410 gr

100-002
410 gr Epoxy Adhesive

100-003
Marble & Stone Glue

100-004
Electirical Pipe Bender Machine

100-005
Electirical Pipe Bender Machine-Small

100-006
Granit Cutter Tool

500-013 **500-014**
8 Metric Anchor

500-015 **500-016**
8 Metric Anchor

500-017
15 cm Screw + Dowel

500-019
Bolt M8

500-018
Inox Bolt M8x25

CLASSICAL Series

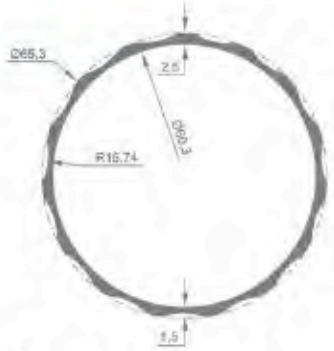

2077
1,085 Kg/M

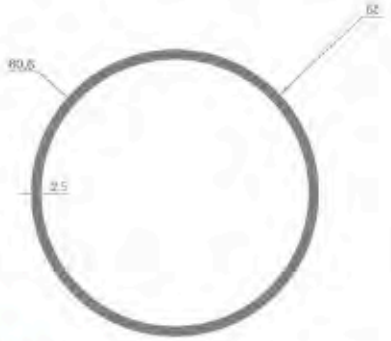

10011
1,171 Kg/M

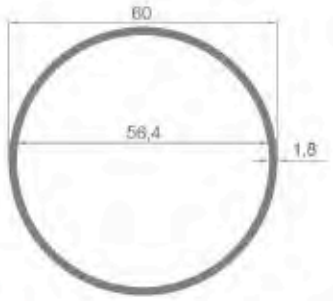

10105
0,888 Kg/M

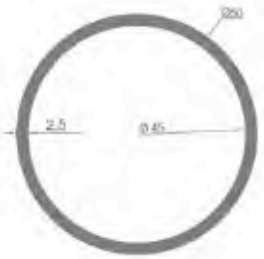

2002
1,007 Kg/M

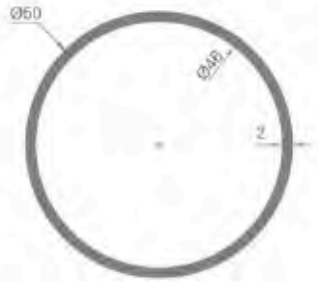

2003
0,815 Kg/M

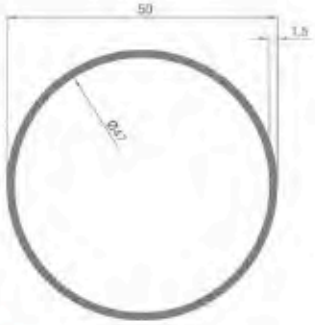

2004
0,617 Kg/M

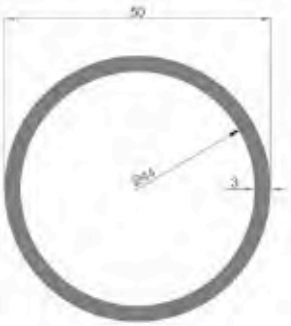

2001
1,193 Kg/M

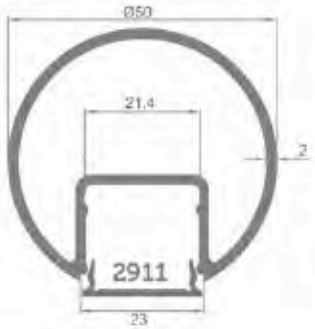

2919
0,980 Kg/M

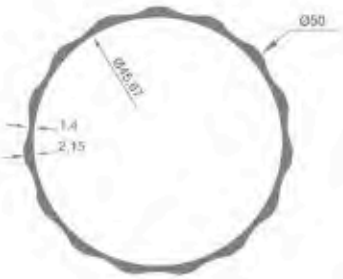

2785
0,733 Kg/M

2901
1,640 Kg/M

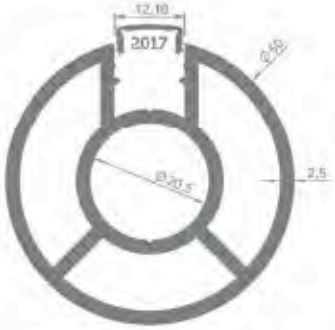

2902
1,703 Kg/M

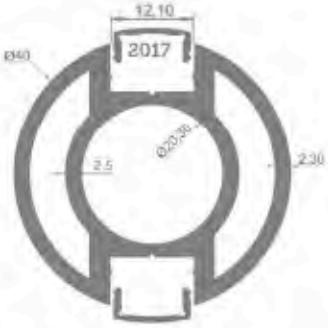

2011
1,256 Kg/M

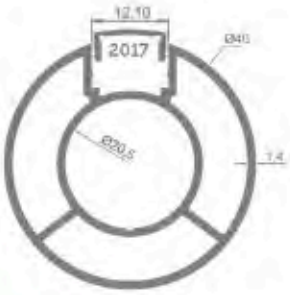

2059
0,772 Kg/M

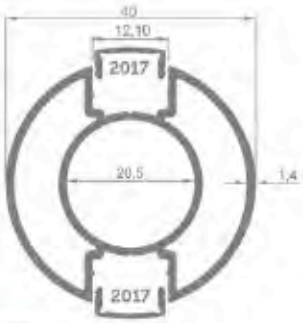

2072
0,726 Kg/M

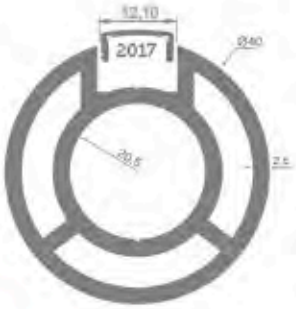

2903
1,350 Kg/M

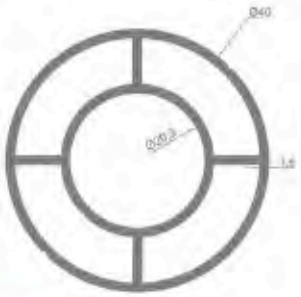

2900
0,900 Kg/M

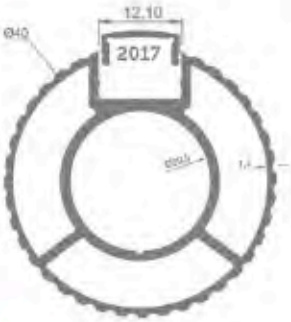

2795
0,801 Kg/M

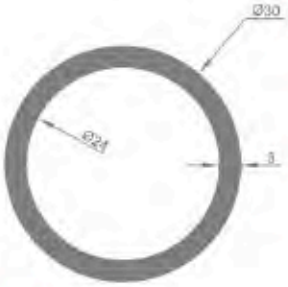

10022
0,685 Kg/M

5
0,184 Kg/M

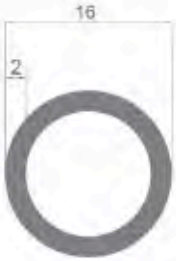

92
0,237 Kg/M

2055
0,440 Kg/M

2787
0,175 Kg/M

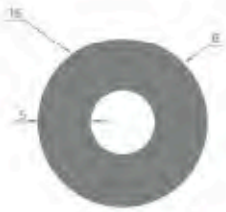

10059
0,467 Kg/M

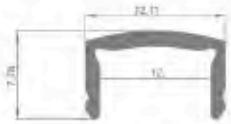

2017
0,078 Kg/M

2911
0,119 Kg/M

CLASSICAL Series

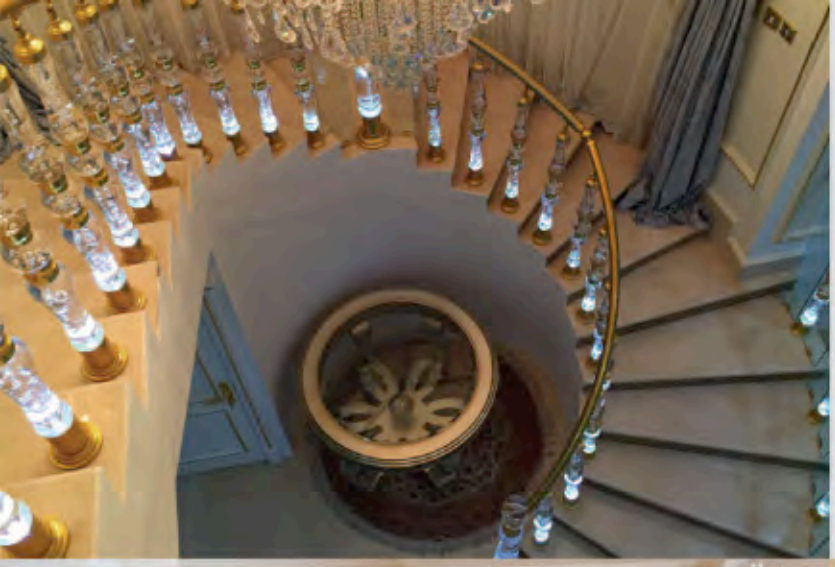

With these authentic products, you can add an attractive atmosphere to your home, workplace and every aspect. Plexiglass Serie can combined Elliptical, Squarline and Classical Series.

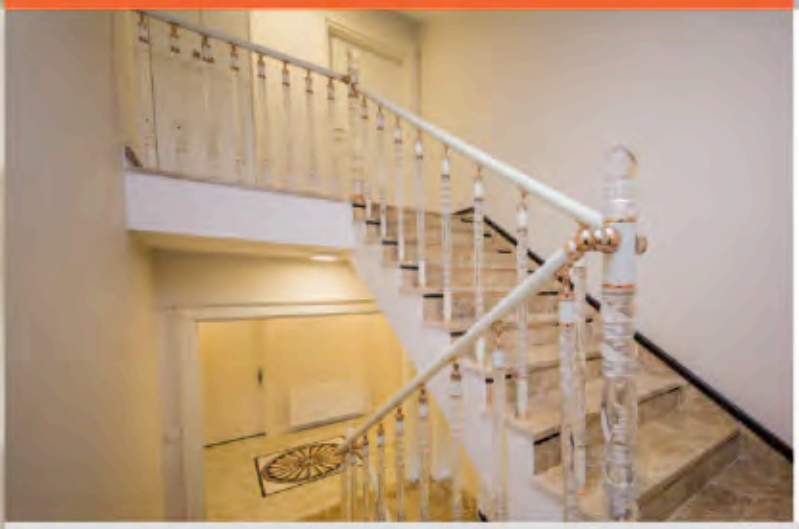

akos®

PLEXIGLASS Series

PLEXIGLASS Series
NEWELS WITH ALUMINIUM ACCESSORIES

PLEXIGLASS Series NEWELS

2701
Bubbly

2741
Vizantion

2716
Beads

2717
Convex

2718
Decorated

2719
King

2720
Dhog

2724
Baghdat

2739
Tripoli

2844
Square

PLEXIGLASS Series
BALUSTRADE WITH ALUMINIUM ACCESSORIES

www.alluminiomatina.it

MADE IN ITALY

Rivenditore / Dealer

ALLUMINIO
MATINA

Informazioni / Information: COSTRUZIONI METALLICHE
Viale Berlinguer, 64 - 92026 Favara (Ag)
Tel./Fax +39 0922 31043 - Cell. +39 347 6927605
E-mail: matina.antonio@libero.it